JANUARY, 1982
Game Nos. 595, 602, & 599

MIDWAYS

MS. PAC-MAN

a Bally co. T.M.

Parts and Operating Manual

UNDER AGREEMENT BY **NAMCO** LTD.

No. 595 UPRIGHT

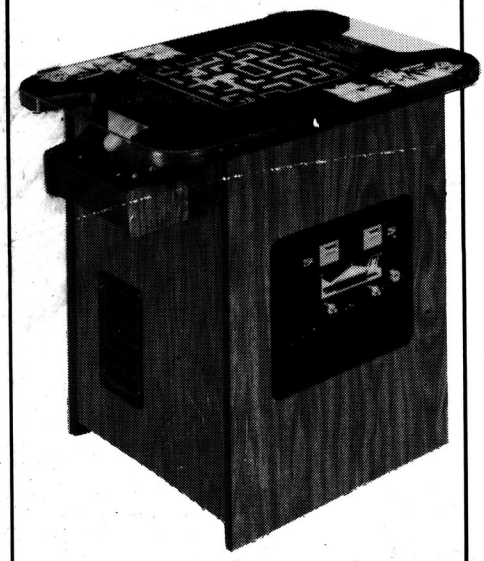

No. 599 COCKTAIL

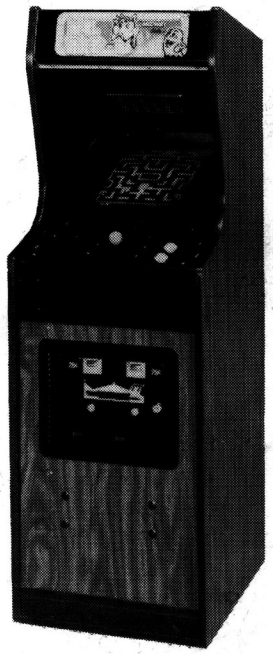

No. 602 MINI

MIDWAY MFG. CO.
A BALLY COMPANY
10750 W. GRAND AVENUE
FRANKLIN PARK, ILLINOIS 60131
USA

Phone: (312) 451-1360 Cable Address: MIDCO Telex No.: 72-1596

Form No. 0595-00300-0000

WARNING

THIS GAME MUST BE GROUNDED. FAILURE TO DO SO MAY RESULT IN DESTRUCTION TO ELECTRONIC COMPONENTS.

WARNING: This equipment Generates, Uses and can Radiate Radio Frequency Energy and if not installed and used in accordance with the Instructions Manual, may cause interference to Radio Communications. As temporarily permitted by Regulation it has not been tested for compliance to Subpart J or Part 15 of FCC Rules, which are designed to provide reasonable protection against such interference. Operation of this equipment in a Residential Area is likely to cause interference in which case the user at his own expense will be required to take whatever measures may be required to correct the interference.

ELECTRICAL BULLETIN: FOR ALL APPARATUS COVERED BY THE CANADIAN STANDARDS ASSOCIATION (CSA) STANDARD C22.2 NO. 1, WHICH EMPLOYS A SUPPLY CORD TERMINATED WITH A POLARIZED 2-PRONG ATTACHMENT PLUG.

CAUTION: TO PREVENT ELECTRIC SHOCK DO NOT USE THIS (POLARIZED) PLUG WITH AN EXTENSION CORD, RECEPTACLE OR OTHER OUTLET UNLESS THE BLADES CAN BE FULLY INSERTED TO PREVENT BLADE EXPOSURE.

ATTENTION: POUR PREVENIR CHOCS ELECTRIQUES NE PAS UTILISER CETTE FICHE POLARISEE AVEC UN PROLONGATEUR. UNE PRISE DE COURANT OU UNE AUTRE SORTIE DE COURANT, SAUF SI LES LAMES PEUVENT ETRE INSEREES A FOND SANS EN LAISSER AUCUNE PARTIE A DECOUVERT.

MIDWAY MFG. CO.
A BALLY COMPANY

Invites You To Use

OUR TOLL FREE NUMBERS FOR SERVICE INFORMATION CONCERNING THIS GAME, OR ANY OTHER MIDWAY GAME YOU NOW HAVE ON LOCATION.

CALL US FOR PROMPT, COURTEOUS ANSWERS TO YOUR PROBLEMS.

Continental U. S. 800-323-7182

Illinois Only 1-800-942-0497

COPYRIGHT 1982 © BY MIDWAY MFG. CO. ALL RIGHTS RESERVED.

NO PART OF THIS PUBLICATION MAY BE REPRODUCED BY ANY MECHANICAL, PHOTOGRAPHIC, OR ELECTRONIC PROCESS, OR IN THE FORM OF A PHONOGRAPHIC RECORDING, NOR MAY IT BE TRANSMITTED, OR OTHERWISE COPIED FOR PUBLIC OR PRIVATE USE, WITHOUT PERMISSION FROM THE PUBLISHER.

FOR PERMISSION REQUESTS, WRITE: MIDWAY MFG. CO., 10750 W. GRAND AVE., FRANKLIN PARK, IL 60131

Printed In U.S.A.

TABLE OF CONTENTS

DESCRIPTION		PAGE
I.	**Introduction**	1-1
II.	**Location and Setup**	
	Inspection	2-1
	Installation	2-1
	Self-Test	2-4
	Game Volume Adjustment Control	2-4
	Option Switch Settings	2-5
	Game Operation	2-6
	Self-Test Mode	2-6
	Attract Mode	2-8
	Ready-to-Play Mode	2-10
	Play Mode	2-10
	Two Player Operation	2-11
III.	**Maintenance and Repair**	
	Cleaning	3-1
	Fuse Replacement	3-1
	Opening the Control Panel	3-2
	Removal of Main Display Glass and T.V. Bezel	3-4
	T.V. Monitor Replacement	3-5
	Printed Circuit Board Replacement	3-8
	Opening the Attraction Panel	3-9
	Coin Door Maintenance	3-11
IV.	**Illustrated Parts Breakdown**	
	No. 595 — Ms. Pac-Man — Upright — Header Fluorescent Light Assy.	4-1
	No. 595 — Ms. Pac-Man — Upright — Header Fluorescent Light Assy. — Parts List	4-1
	No. 595 — Ms. Pac-Man — Upright — Front	4-2
	No. 595 — Ms. Pac-Man — Upright — Front — Parts List	4-3
	No. 595 — Ms. Pac-Man — Upright — Rear Access	4-4
	No. 595 — Ms. Pac-Man — Upright — Rear Access — Parts List	4-5
	No. 602 — Ms. Pac-Man — Mini — Front	4-6
	No. 602 — Ms. Pac-Man — Mini — Front — Parts List	4-7
	No. 602 — Ms. Pac-Man — Rear Access	4-8
	No. 602 — Ms. Pac-Man — Rear Access — Parts List	4-9
	No. 599 — Ms. Pac-Man — Cocktail — Front	4-10
	No. 599 — Ms. Pac-Man — Cocktail — Front — Parts List	4-11
	No. 599 — Ms. Pac-Man — Cocktail — Interior Access	4-12
	No. 599 — Ms. Pac-Man — Cocktail — Interior Access — Parts List	4-13
	Ms. Pac-Man — Transformer Board Assy.	4-15
	Ms. Pac-Man — Transformer Board Assy. — Parts List	4-15
	Front Door Assy. — U.S.A. 25¢	4-16
	Front Door Assy. — U.S.A. 25¢ — Parts List	4-17
	Ms. Pac-Man — Control Assy. — All Versions	4-18
	Ms. Pac-Man — Control Assy. — All Versions — Parts List	4-19

TABLE OF CONTENTS (cont'd)

V. Technical Troubleshooting 5-1
Introduction 5-1
General Suggestions 5-1
Harness Component Troubleshooting 5-1
Transformer and Line Voltage Problems 5-2
A Glossary of Microprocessor Terms 5-3
Introduction to the Z-80 CPU 5-3
General Purpose Registers 5-4
Arithmetic and Logic Unit (ALU) 5-4
Instruction Register and CPU Control 5-4
Z-80 CPU Pin Description 5-4

VI. T.V. Monitor Manual 6-1
Introduction 6-1
Symptom Diagnosis 6-2
Guide to Schematic Symbols 6-3
Troubleshooting 6-5
Theory of Operation 6-6
Differences Between Monitors 6-8
Parts Interchangeability 6-9
Monitor Schematic — Wells-Gardner 19″ 6-10
Replacement Parts List — Wells-Gardner 19″ 6-11
Monitor Schematic — Electrohome 19″ 6-13
Replacement Parts List — Electrohome 19″ 6-14
Monitor Schematic — Electrohome 13″ 6-18
Replacement Parts List — Electrohome 13″ 6-19

VII. Schematics and Wiring Diagrams
Wiring Diagram w/ Credit Multiplier — Upright 7-1
Wiring Diagram w/ Credit Multiplier Bypass — Upright 7-2
Wiring Diagram w/ Credit Multiplier — Mini 7-3
Wiring Diagram w/ Credit Multiplier Bypass — Mini 7-4
Wiring Diagram w/ Credit Multiplier — Cocktail 7-5
Wiring Diagram w/ Credit Multiplier Bypass — Cocktail 7-6
Game Logic Board — Component Layout 7-8
Game Logic Board — Schematic 7-9
V-RAM Addresser Board — Component Layout 7-10
V-RAM Addresser Board — Schematic 7-11
Z-80 Sync Buss Controler — Component Layout 7-12
Z-80 Sync Buss Controler — Schematic 7-13
Auxiliary Board — Component Layout 7-14
Auxiliary Board — Schematic 7-15
Filter Board — Component Layout 7-16
Filter Board — Schematic 7-17
Credit Multiplier Board — Component Layout 7-18
Credit Multiplier Board — Schematic 7-19

TABLE OF FIGURES

FIGURE		PAGE
1	Assigned point values	1-2
2	Location of serial number, on/off switch, interlock switch & major sub-assemblies	2-2
3	Major sub-assemblies (cont. from FIG 2)	2-3
4	Interlock switch operation	2-3
5	Location of volume control & option switch	2-4
6	Option switch settings	2-5
7	Identification of "on screen" graphics during play	2-6
8	Location of fuses	3-1
9	Removing control panel — Upright & Mini games	3-2
10	Opening Cocktail game	3-3
11	Removing control panel — Cocktail game	3-3
12	Removing display glass — Upright game	3-4
13	Removing display glass — Mini game	3-4
14	Removing top glass — Cocktail game	3-5
15	Removing monitor — Upright game	3-6
16	Removing monitor — Mini game	3-6
17	Opening Cocktail game	3-7
18	Removing monitor — Cocktail game	3-7
19	Removing printed circuit boards	3-8
20	Removing attraction panel — Upright game	3-9
21	Replacing fluorescent starter — Upright game	3-10
22	Replacing fluorescent light mounting bracket & speaker — Upright game	3-10
23	Removing attraction panel — Mini game	3-10
24	Replacing speaker — Mini game	3-11
25	Removing and replacing coin acceptor	3-11
26	Cleaning the metal coin acceptor	3-12
27	Lubricating the metal coin acceptor	3-12
28	Opening the plastic coin acceptor	3-13
29	Changing the plastic coin acceptor to accept American or Canadian quarters	3-13
30	Changing difficulty level of game	3-14

Ms. Pac-Man

IMPORTANT NOTE

DO NOT plug in your new game yet. Before you do anything to your game, we recommend that you read SECTIONS I and II of this manual completely. It will not take more than a few minutes and it may be very helpful.

I. Introduction

MS. PAC-MAN is a one or a two player game. There are three models: the "UPRIGHT", "MINI", and "COCKTAIL TABLE". When the two player mode is selected on the Upright or Mini model, the players take turns at the controls to guide their player through the game course. If you have purchased the Cocktail Table model of this game, the rules of play are the same. The only **difference** is that in the two player mode of the Cocktail Table game, the picture flips to face you when it's your turn.

When playing this game, you are in complete control of MS. PAC-MAN. She will go wherever you tell her to. And she just loves to eat dots. However, she doesn't like the four ghosts, BLINKY (red), PINKY (pink), INKY(turquoise), and SUE (amber) because they feel the same way about her as she does about dots.

BLINKY, PINKY, INKY, and SUE are four **VERY SMART** ghosts. They move very fast and seem to have a sixth sense which always lets them know exactly where MS. PAC-MAN is in the maze. They never give up in their pursuit of her. One of their favorite tricks is to divide and try to trap her between them. You really have to keep an eye on them.

But MS. PAC-MAN can turn the tables on these four ghosts for short periods of time during each maze. All she has to do is let them get fairly close in their pursuit of her and then eat one of the four flashing ENERGIZER DOTS that every maze begins with (one close to each corner of the maze). When this happens, it causes the four ghosts to turn blue with fright no matter where they are in the maze. This is because they know that when she eats an ENERGIZER DOT it gives MS. PAC-MAN the ability to eliminate them. However, she can **ONLY** eliminate them for as long as they are blue.

The ghosts will only stay blue for a few seconds after MS. PAC-MAN eats an ENERGIZER DOT. But they do give a warning **BEFORE** they turn back to their original colors — they start to flash.

As your skill level increases, the four ghosts speed up their pursuit of MS. PAC-MAN and they stay blue for **shorter and shorter** periods of time after she eats an ENERGIZER DOT until, in the high number mazes, they do not turn blue at all.

One bonus player (this is switch selectable) can be awarded to you as you reach or pass a certain preselected point value. The assigned point values for all items that can be eaten are as listed in Figure 1.

Major New Features

A major new feature of your MS. PAC-MAN game is that there are four different mazes with varying numbers of exits and varying exit locations. The mazes are generally more difficult than that of PAC-MAN.

Another major new feature is that the *maze identifier* symbols move throughout the maze and are thus more difficult to get.

Game Objective

The object of the game is to **HAVE FUN** and survive as long as possible while constantly improving your skills and eating as many dots and eliminating as many ghosts as you can. As you do this, each following maze will be harder and harder to complete.

OBJECT EATEN	POINT VALUE
DOTS	10 POINTS EACH
ENERGIZER DOTS	50 POINTS EACH
1ST GHOST	200 POINTS
2ND GHOST	400 POINTS
3RD GHOST	800 POINTS
4TH GHOST	1600 POINTS
CHERRIES	100 POINTS
STRAWBERRY	200 POINTS
ORANGE	500 POINTS
PRETZEL	700 POINTS
APPLE	1000 POINTS
PEAR	2000 POINTS
BANANA	5000 POINTS

Figure 1 Assigned point values

NOTE: After you complete the BANANA maze, the maze identifier symbols will appear and move through the maze in **RANDOM ORDER** and will retain their **ORIGINAL** point values.

II. Location and Setup

INSPECTION

1. Remove the game from its shipping crate.
2. Inspect the entire outside of it for any signs of damage.
   - Any scratches? Dents? Cracks?
   - Any broken controls?
   - Any broken glass or plastic?
   - Just look it over closely and make a note of any signs of damage.
3. Remove the shipping cleats from the bottom of the cabinet.
4. Install the four levelers, one at each corner of the cabinet.
   - Level the cabinet.
5. Open the cabinet and inspect the inside of the game for any signs of damage. See Figure 2.
   - Also check to make sure all plug-in connectors on the wire harness are firmly seated.

NOTE: ALL connectors or plugs are keyed so they will only go together when all pins are properly lined up.

   - Replug any connectors found unplugged. DO NOT FORCE PLUGS ONTO CONNECTORS. DO NOT FORCE PLUGS TOGETHER. If it won't go on easily, assuming the keys are lined up, it either does not belong there or is damaged.
   - Make sure all printed circuit boards (P.C.B.'s) are firmly seated in their connectors. See Figure 2. These connectors are also keyed. The P.C.B.'s will only go into them one way without being damaged.
   - Note the location of the game's serial number. See Figure 2.
   - Check all major subassemblies to be sure they are mounted securely. These are called out in Figures 2 & 3.

     Power supply.
     Control panel(s).
     T.V. monitor.
     Other P.C.B.'s and/or P.C.B. rack, etc.
     Transformer board assembly.
6. Make a note of any problems that can't be easily corrected.
7. Call your distributor and/or service man about your problem list.

INSTALLATION

1. **Location requirements:**

   Power:
   Domestic 110 V @ 60 Hz
   Foreign 200 V to 240 V @ 50 Hz

   Temperature: 32° to 100° F (0° to 38° C)

   Humidity: Not over 95% relative

   Space required:
   Upright 25" x 33" (63 x 84cm)
   Mini 20" x 24" (50 x 60cm)
   Cocktail 32" x 22" (81 x 55cm)

   Game height:
   Upright 70" (175cm)
   Mini 61" (153cm)
   Cocktail 29" (73cm)

2. **Voltage Selection:**

   Your game is designed to work properly on the line voltage where you are located. Check your line voltage with a meter to determine what its value is. Then check the power input wires to the main power supply transformer on your game to be sure they are connected to taps which correspond to your line voltage value.

   If the power input wires to the main power supply transformer are not connected to taps which correspond to your local line voltage, move them to the proper taps.

   If the line voltage in your area falls outside the upper or lower limits of the range of inputs covered by the main power supply transformer, **DO NOT PLUG YOUR GAME IN** until you have talked with your distributor and/or service man and obtained a solution to this problem. Otherwise you could damage your game.

3. **Interlock and power ON/OFF switches.** See Figure 2.
   - To help prevent the possibility of getting an electric shock while working inside the game cabinet, interlock switches have been installed at each cabinet access door (this **DOES NOT** include the coin door in the Upright and Mini models).
   - When any access door is opened, the interlock switch installed there turns off all power to the game.
   - Check each interlock switch for proper operation.

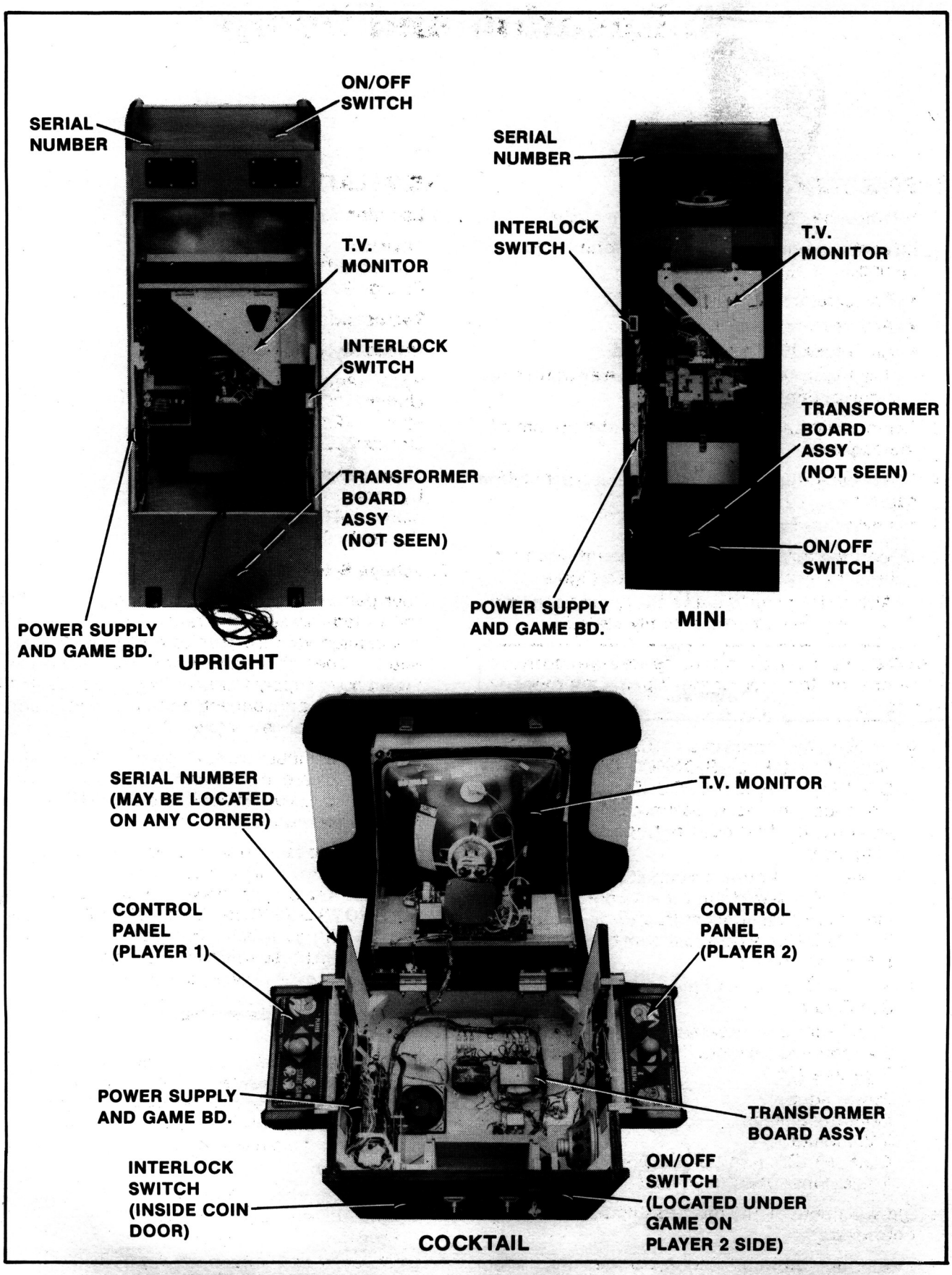

Figure 2 Location of serial number, on/off switch, interlock switch & major sub-assemblies

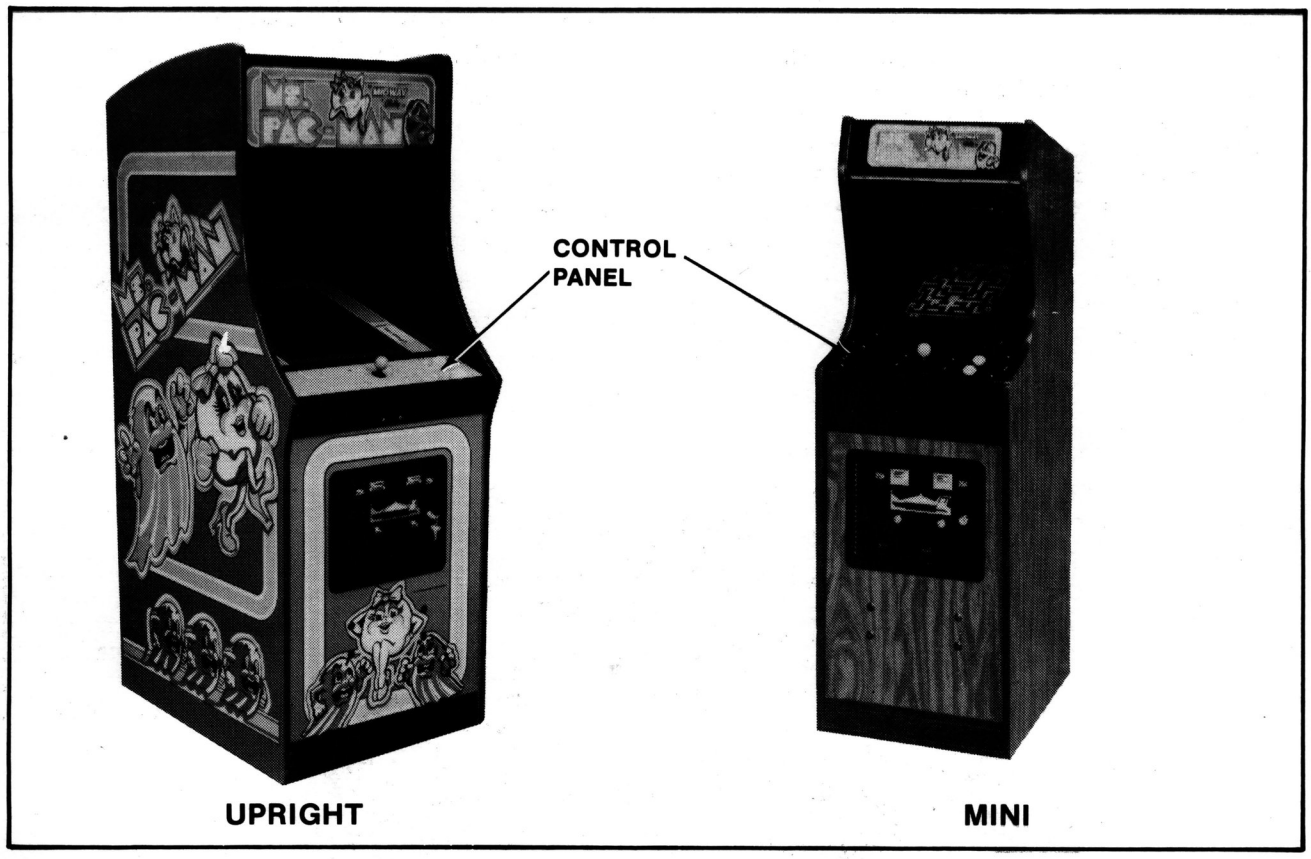

Figure 3 Major sub-assemblies (cont. from FIG 2)

After checking the line voltage in your area and determining that the input wires to the main power supply transformer of your game are connected properly — or — after obtaining a solution to your over or under voltage problem from your distributor and/or your service man, plug the game into your A.C. wall outlet.

The game ON/OFF switches for all models are located as shown in Figure 2. Turn the game on and allow it to warm up a few minutes.

Slowly open each access door to the game (this **does not** include the coin door on the Upright and Mini models).

As the door is opened approximately 1" (2.54cm) the power to the game should go off (the T.V. monitor, all the lights, and all sounds will stop).

If this does not happen, check the interlock switch by this door to see if it has broken loose from its mounting or if it is stuck in the "ON" position.

If the switch is found to be bad, turn the game off, unplug it, and replace the interlock switch.

When done, plug the game back into the wall outlet, close the access door, and turn the game back on.

After the game has warmed up, repeat the above interlock switch test.

When the interlock switch is working properly and turns the power to the game off, power may be restored to the game with the access door(s) open. Take hold of the interlock switch plunger and **gently** pull it out to its fully extended position. THIS IS TO BE USED **ONLY** FOR SERVICING THE GAME. See Figure 4.

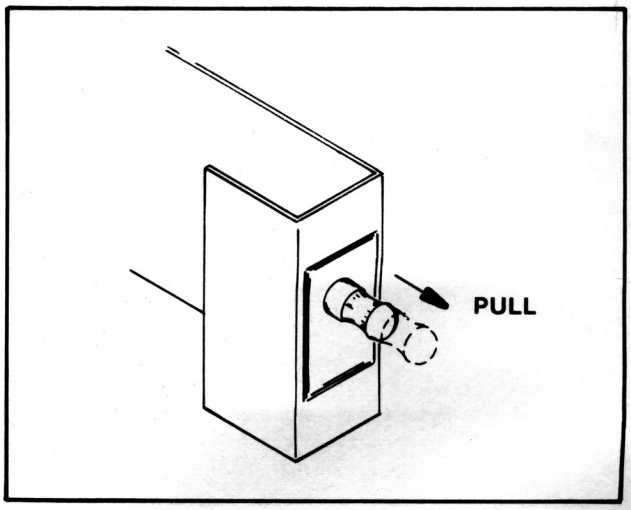

Figure 4 Interlock switch operation

SELF-TEST

Your new game will Self-Test itself to see if it has any bad parts. The information it receives while testing itself will be shown on the T.V. monitor. Some information can also be heard through the game's speaker system. See the GAME OPERATION section for a more detailed description of this function.

When there is a bad result according to the Self-Test, call your distributor and/or service man to have the trouble fixed unless it is something you can do yourself (such as replace a bad RAM or ROM chip).

GAME VOLUME ADJUSTMENT CONTROL. See Figure 5.

The game volume control pot is located on the game logic board assembly. There is only one pot. For adjustment, it may be reached through the rear access door on the Upright and Mini models. On the Cocktail Table model, you will have to open the table top to reach it.

To make the sounds louder, turn the pot in a clockwise direction (↷).

To make the sounds **less** loud, turn the pot in a counterclockwise direction (↶).

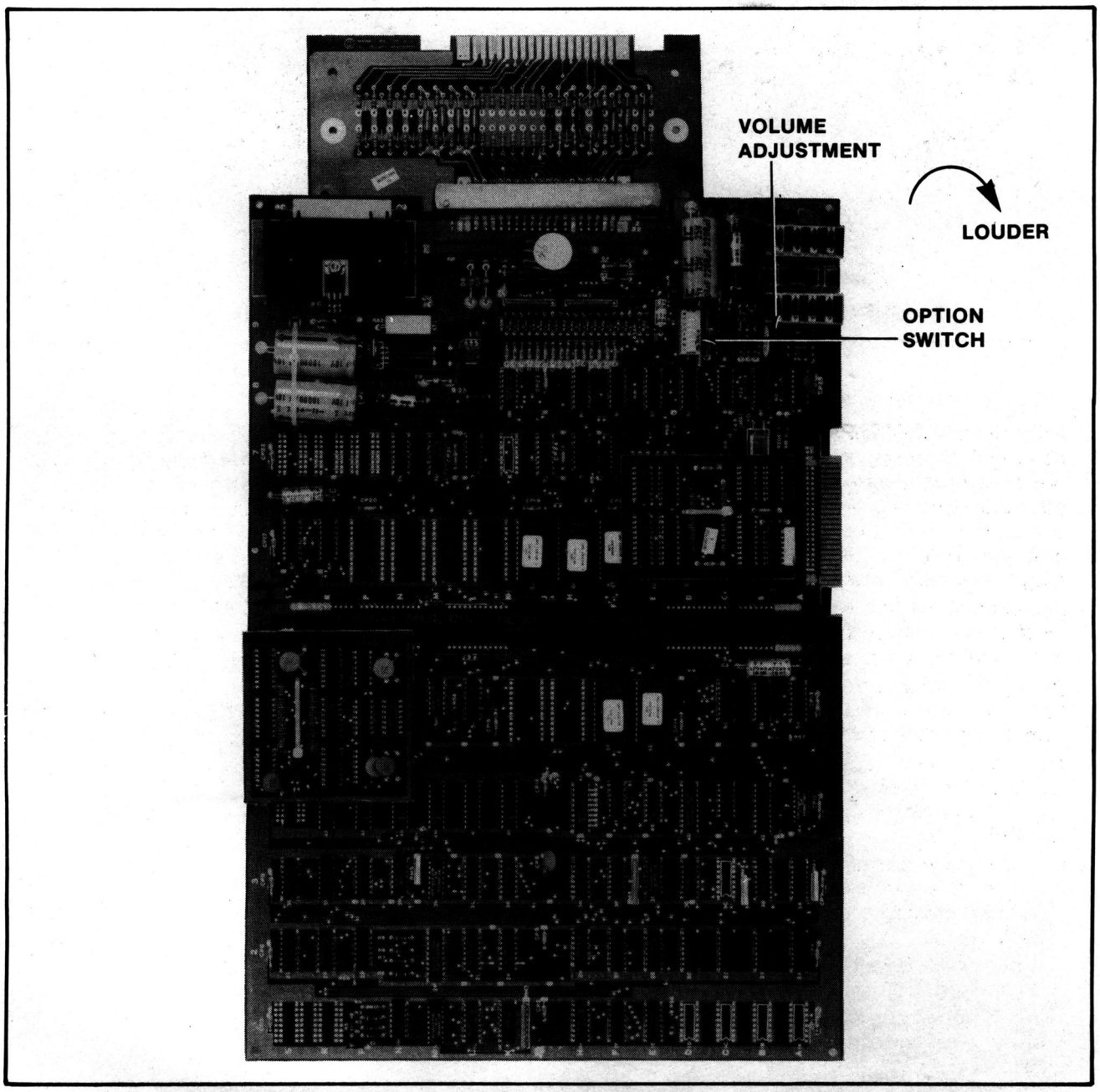

Figure 5 Location of volume control & option switch

OPTION SWITCH SETTINGS

To change the option switch settings, you DO NOT have to take the Main Game Logic Board out of the game. They can be easily reached through the rear access door on the Upright and Mini models. On the Cocktail Table model, you do have to open the table top to reach them.

When changing any options, ALWAYS put the game into the Self-Test mode, make your changes, check the results on the monitor screen, take the game out of the Self-Test mode, and play the game to be sure the switches have worked properly and that no switches were accidentally moved that were not meant to be. (These switches are small and this can happen.)

The option switch settings and what they will make the game do are shown in Figure 6. See Figure 5 for option switch locations.

MS. PAC-MAN

OPTION SWITCH SETTINGS

	SW#1	SW#2	SW#3	SW#4	SW#5	SW#6	SW#7	SW#8
METHOD OF PLAY								
FREE PLAY	ON	ON						
1 COIN 1 PLAY	OFF	ON						
1 COIN 2 PLAYS	ON	OFF						
2 COINS 1 PLAY	OFF	OFF						
NUMBER OF MS. PAC-MEN PER GAME								
1 MS. PAC-MAN			ON	ON				
2 MS. PAC-MEN			OFF	ON				
3 MS. PAC-MEN			ON	OFF				
5 MS. PAC-MEN			OFF	OFF				
BONUS MS. PAC-MEN								
BONUS MS. PAC-MAN AT 10,000 POINTS					ON	ON		
BONUS MS. PAC-MAN AT 15,000 POINTS					OFF	ON		
BONUS MS. PAC-MAN AT 20,000 POINTS					ON	OFF		
NO BONUS					OFF	OFF		
SPECIAL FUNCTIONS								
AUTOMATIC RACK ADVANCE							ON	OFF
FREEZE VIDEO (MONITOR PRESENTATION STOPS MOVING)							OFF	ON
GAME OPERATES NORMALLY							OFF	OFF

Figure 6 Option switch settings

Game Operation

MS. PAC-MAN is a one or a two player game with a color T.V. monitor. The game gives a display which has all the parts shown in Figure 7.

The game has four possible modes of operation: ATTRACT, READY-TO-PLAY, PLAY, and SELF-TEST.

SELF-TEST MODE

The Self-Test mode is a special mode for checking the game switches and computer functions. It is the easiest and best way to check for proper operation of the entire game.

NOTE: Putting the game into Self-Test will cause it to **erase** any CREDITS on the game from its memory.

You may begin a Self-Test at any time by sliding the Self-Test switch to the "ON" position after the power to the game is on. The test switch is located inside the coin door under the coin meter. When this is done, the game will react as follows:

1. First, you will see random colored parts of the picture, then a moving pattern of white letters and numbers followed by moving multicolored patterns on the screen.
2. Immediately following this, a rightside up test display is shown on the monitor screen. This will remain until you set the Self-Test switch back to the "OFF" position. This test display is shown below.

SELF-TEST DISPLAY
AND BOARD LOCATION COORDINATES

MEMORY OK or
(M-Rom-1/Bad C Ram-0/Bad W Ram-1/etc.)

*1 COIN *1 CREDIT
BONUS *15000
MS. PAC-MEN *3
UPRIGHT or (TABLE)

* = switch selectable

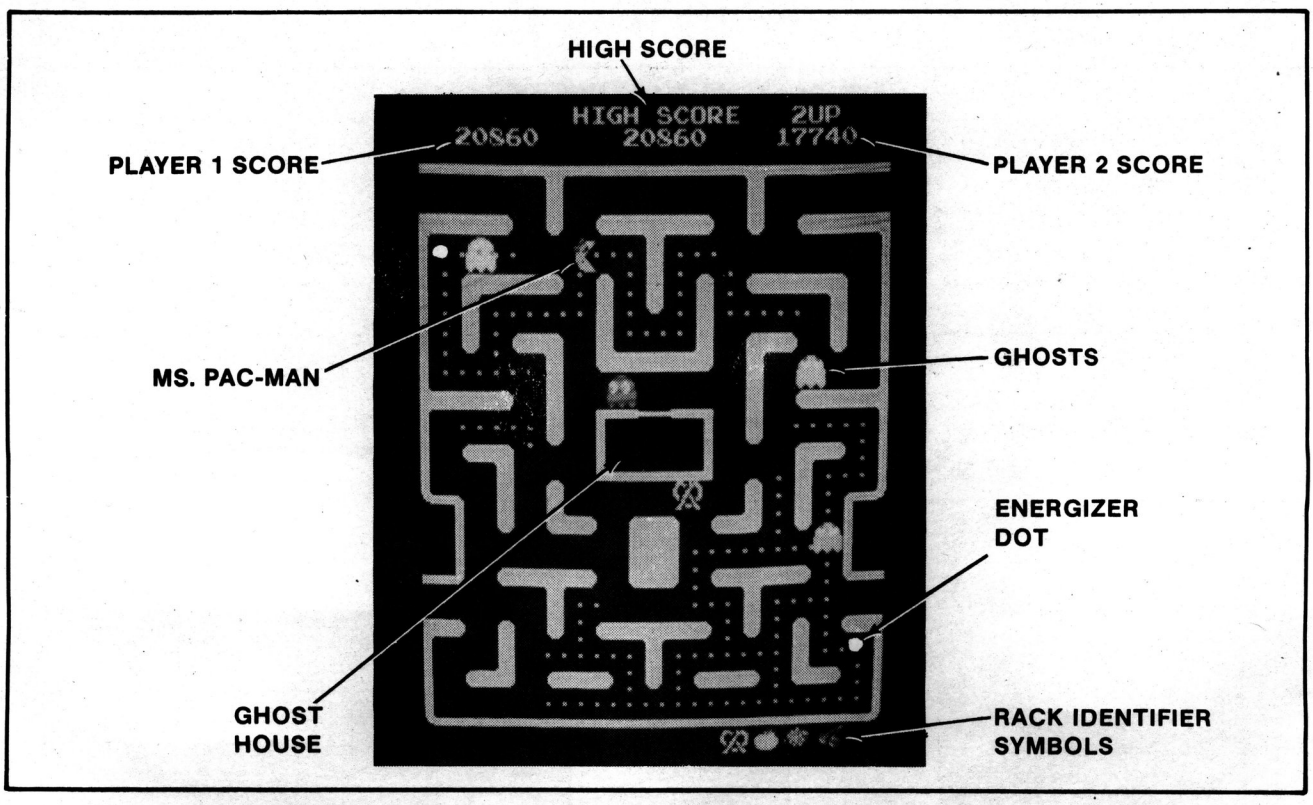

Figure 7 Identification of "on screen" graphics during play

3. If a bad ROM or RAM is found by the game's internal check system during the Self-Test, the game indicates this to you by showing the location code of the bad chip(s) in place of the "MEMORY OK" message. The following table translates the chip location codes into actual positions on the game logic P.C. Board.

DISPLAY	DESCRIPTION
MEMORY OK	All RAMs are good.
BAD V RAM-0	RAM located on Logic PC board at position 4K is bad.
BAD V RAM-1	RAM located on Logic PC board at position 4N is bad.
BAD C RAM-0	RAM located on Logic PC board at position 4L is bad.
BAD C RAM-1	RAM located on Logic PC board at position 4P is bad.
BAD W RAM-0	RAM located on Logic PC board at position 4M is bad.
BAD W RAM-1	RAM located on Logic PC board at position 4R is bad.
MEMORY OK	All ROMs are good.
M-ROM-0	ROM located on Logic PC board at position 6E is bad.
M-ROM-1	ROM located on Logic PC board at position 6F is bad.
M-ROM-2	ROM located on Logic PC board at position 6H is bad.
M-ROM-3	ROM located on Logic PC board at position 6J is bad.

4. The detection of bad components on the Auxiliary Logic PC Board is not quite as simple as is the case for the Main Logic PC Board. The following table lists the components that are on this Auxiliary PC Board and what symptoms they will cause to appear on the monitor when each is bad.

BAD COMPONENT	SYMPTOM DISPLAYED ON MONITOR (GAME IS NOT IN SELF-TEST)
Z-80 CPU	**STATIONARY** color garbage (parts of pictures)
	CPU located on auxiliary PC board at position U4
E-ROM-0	Game goes through warm-up routine over & over & over...
	ROM located on Auxiliary PC board at position U5
E-ROM-1	Game goes through warm-up routine over & over & over...
	ROM located on Auxiliary PC board at position U6
E-ROM-2	**FLASHING** color garbage (parts of pictures)
	ROM located on Auxiliary PC board at position U7
CUSTOM CHIP CG-820	Monitor screen reads out "ROM 0"
	With game in Self-Test — Screen reads "BAD ROM 0"
	CG-820 located on Auxiliary PC board at position U0
CUSTOM CHIP CG-821	Monitor screen displays **FLASHING** color garbage (parts of pictures)
	CG-821 located on Auxiliary PC board at position U1
CUSTOM CHIP CG-822	Screen display is same as for CG-821
	With game in Self-Test — Screen reads out **UPSIDEDOWN** "BAD W RAM-0"
	CG-822 located on Auxiliary PC board at position U2
CUSTOM CHIP CG-823	Screen display is same as for CG-821
	CG-823 located on Auxiliary PC board at position U3

5. To check your game function switches and buttons (coin counter switches, TEST CREDIT button, 1 PLAYER and 2 PLAYER buttons): activate each one while the game is in the Self-Test mode. You should hear a game sound for each activation. If you do not hear it, the switch/button is either not working, miswired, or disconnected. Check it out thoroughly.
6. When finished with the Self-Test mode, slide the Self-Test switch back to the "OFF" position.

- A cross hatch pattern appears on the monitor screen for about 2 seconds.
- If you wish to keep this test pattern on the monitor screen for further use, slide Self-Test switch back to the "ON" position **after** the cross hatch appears and **before** it disappears.
- When finished with the cross hatch pattern, set the Self-Test switch to the "OFF" position.
- Normal game functions will now return to the monitor screen.

ATTRACT MODE

1. The Attract mode starts:
   - Just after power has been turned on to the game. (Self-Test switch is in the "OFF" position.)
   - After a Self-Test has been completed. (Performing a Self-Test sets the credits in the game's memory to zero "0".)
   - After a play has been finished and there are no more credits left in the game's memory.
   - In the Attract mode, the game will give the following displays **centered** on the monitor screen:

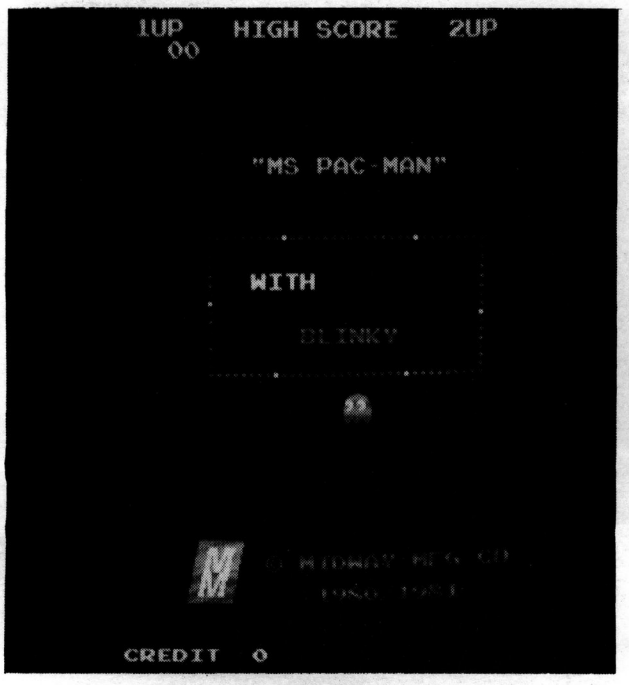

DISPLAY 1

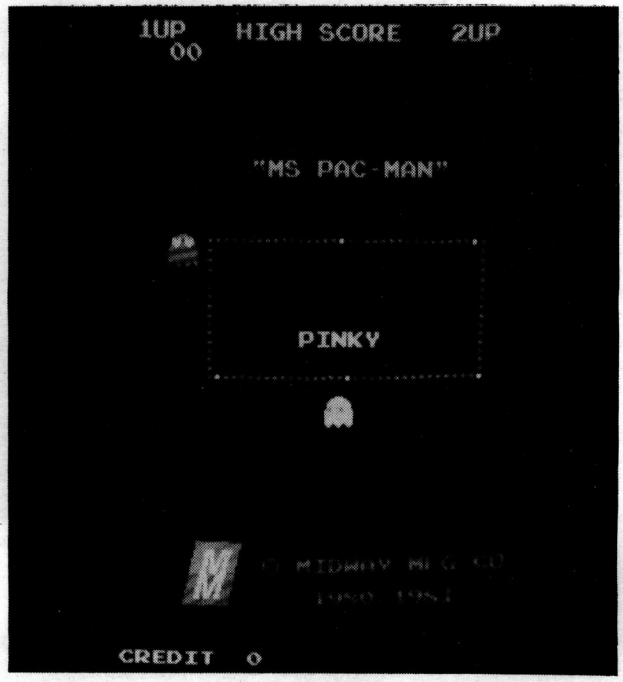

DISPLAY 2

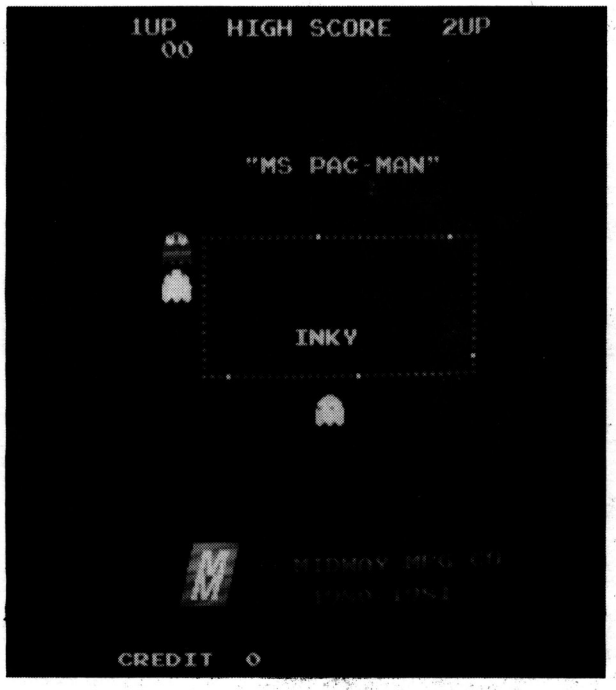

DISPLAY 3

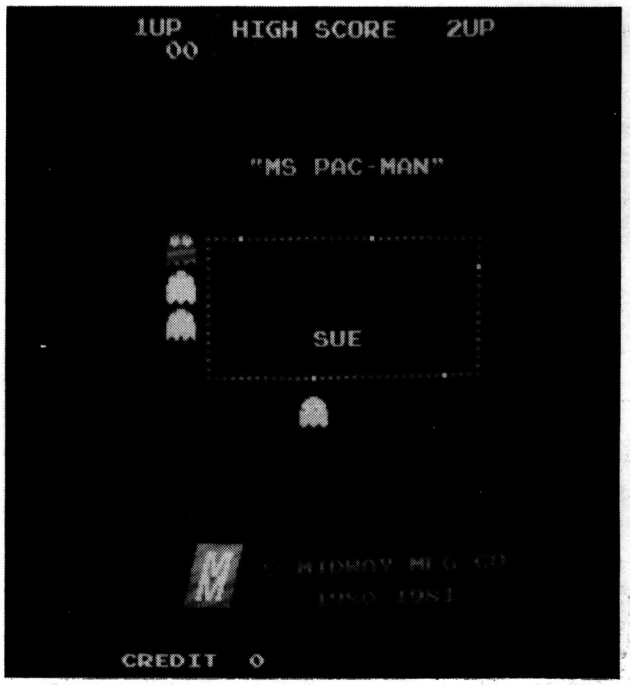

DISPLAY 4

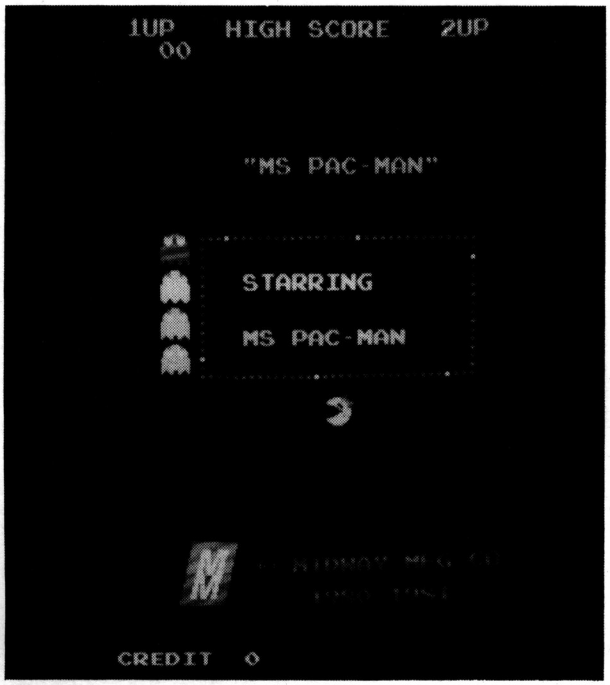

DISPLAY 5

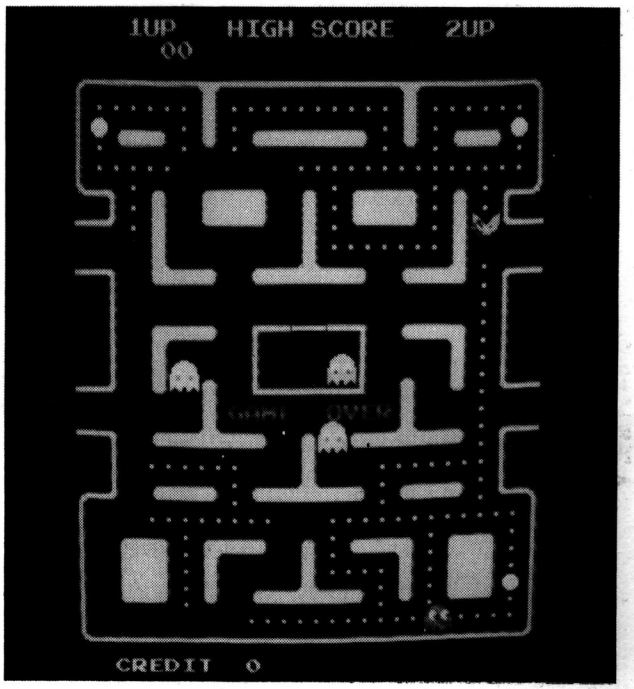

DISPLAY 6

- No matter where the game is in the Attract mode sequence, it will immediately go to the following display as soon as a game has been paid for. It will hold this display on the monitor screen until the "1 PLAYER" or the "2 PLAYER" start button is pushed.

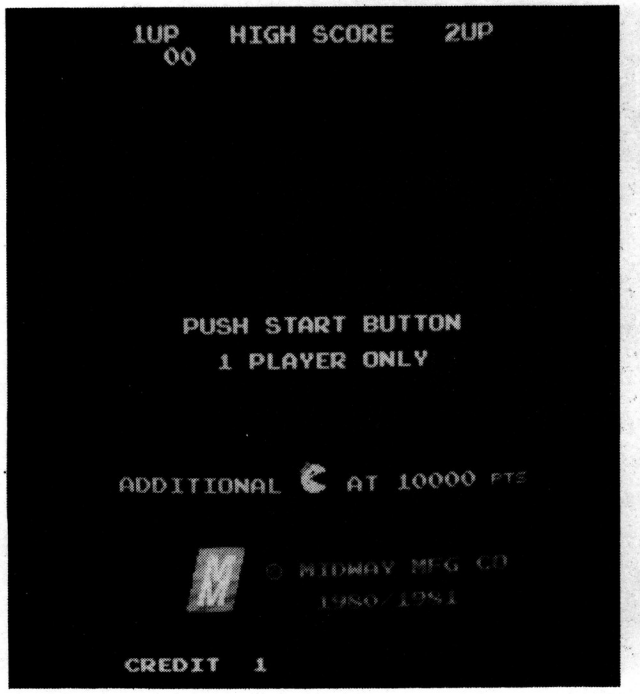

DISPLAY 1

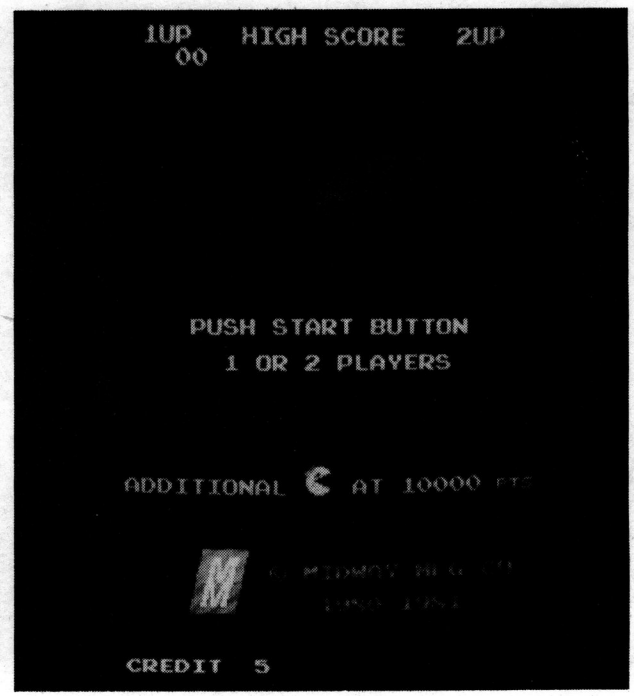

DISPLAY 2

READY-TO-PLAY MODE

1. The Ready-To-Play mode starts when enough coins have been accepted for a 1 or a 2 player game.
2. The Ready-To-Play mode ends when either the "1 PLAYER" or the "2 PLAYER" push button is pressed.
3. In the Ready-To-Play mode, the game will give one of the above displays **centered** on the monitor screen.
4. If no START button is pressed, the game will hold this display on the screen indefinitely.

PLAY MODE

1. The Play mode begins when either the "1 PLAYER" or the "2 PLAYER" start button is pressed. "READY!" is displayed below the "GHOST HOUSE" on the screen.
2. The Play mode ends when your last MS. PAC-MAN has been eliminated. When this happens, "GAME OVER" is written across the center of the monitor screen (below the "GHOST HOUSE").
3. The game consists of four different mazes. Each maze has side exits. These vary in number and location on each of the four mazes. The mazes contain small dots in most of the passageways plus four flashing ENERGIZER DOTS (one near each corner of the maze). MS. PAC-MAN just loves to eat the dots in these passageways. Each maze also has a "GHOST HOUSE" at its center — maximum capacity, three ghosts at one time. Its door is on its top side (side farthest from player).
4. At the beginning of each game, MS. PAC-MAN appears at the lower center of the maze while the four ghosts appear at the "GHOST HOUSE". BLINKY appears outside the door and PINKY, INKY, and SUE appear inside the "GHOST HOUSE".
5. When play begins, BLINKY (who'd love to eliminate her) immediately begins looking for MS. PAC-MAN (who immediately begins eating dots just as fast as she can). As time passes, PINKY, INKY, and SUE (who'd also love to eliminate her) leave the "GHOST HOUSE" one at a time and begin looking for MS. PAC-MAN — who is still busily eating dots just as fast as **YOU** can steer her to them.

NOTE: If MS. PAC-MAN eats a maze identifier symbol as it comes wandering through the maze, its point value is immediately added to your score.

But with all four ghosts chasing her, it is not as easy to eat the dots (without being eliminated by a ghost) as it was earlier in the game. And BLINKY, PINKY, INKY, and SUE are four **VERY SMART** ghosts. For instance, they will divide up two, three, or four ways to try to trap MS. PAC-MAN between them, in a corner, or even in one of the tunnels. You've really got to watch them! It seems like they always have some sneaky new trick up their sleeves.

However, if they get too close, MS. PAC-MAN can always eat one of the flashing ENERGIZER DOTS. When this happens, it causes all four ghosts to turn blue with fright no matter where

they are in the maze. This is because they know that when she eats an ENERGIZER DOT it gives MS. PAC-MAN the ability to eliminate them. But, she can **ONLY** eliminate them for as long as they are blue. And they will only stay blue for a short period of time. But the ghosts do give a warning **BEFORE** they turn back to their original colors — they start to flash.

When MS. PAC-MAN eliminates a blue ghost, its point value appears on the monitor screen at the place where the ghost was eliminated while at the same time being added to your score, and the ghost disappears — all except for its eyes. The eyes go back to the "GHOST HOUSE" where they get another body of their original color. This done, they leave the "GHOST HOUSE" again and take up their pursuit of MS. PAC-MAN once more.

When she eats the last dot of any particular maze: all movement stops immediately, the maze flashes, and the next maze appears. All the players are in the new maze when it appears. The word "READY!" is also there — right below the "GHOST HOUSE". After a second or two passes, the word "READY!" disappears and play begins.

You **MUST** eat all the dots in any particular maze in order to advance to the next one.

The maze identifier symbols appear at the bottom edge of the monitor screen.

As your skill level increases, the four ghosts speed up their pursuit of MS. PAC-MAN and they stay blue for **shorter and shorter** periods of time after she eats an ENERGIZER DOT until, in the high number mazes, they do not turn blue at all.

One bonus player (this is switch selectable) can be awarded to you as you reach or pass a certain preselected point value. The assigned point values for all items that can be eaten are as listed in Figure 1.

When one of the ghosts happens to eliminate one of your MS. PAC-MEN, assuming you have at least one remaining in reserve, the word "READY!" appears below the "GHOST HOUSE" at the same time one of your reserve MS. PAC-MEN appears at the lower center part of the maze. After a second or two passes, the word "READY!" disappears and play begins anew.

When one of the ghosts eliminates your **LAST** MS. PAC-MAN, the words "GAME OVER" are displayed below the "GHOST HOUSE", your score is displayed under "1 UP", and in addition, if your score was the highest on this game to date, it will also be displayed under "HIGH SCORE" at the top center of the monitor screen. The game will then either go into the Ready-To-Play mode (if there are still credits left in its memory) or into the Attract mode (if there are no more credits left in its memory).

Most of the above holds true in the "2 PLAYER" mode also. But there are a few minor differences.

TWO PLAYER OPERATION

The Upright, Mini, and Cocktail Table models all have two player operation.

In the two player mode, the rules of play are the same as in the single player mode. There are some additional rules, however.

1. In the Upright and Mini models, the players must take turns at the controls.
2. In the Cocktail Table model, each player has his own set of individual controls. The picture will flip to face you when it is your turn.(When it is not your turn, your set of controls will have **NO** effect on the game.)
3. Your turn lasts until one of the ghosts eliminates your MS. PAC-MAN. At this point, the game will do one of several things depending on whether or not the eliminated MS. PAC-MAN was your last or if you still have others remaining in reserve.

MS. PAC-MAN ELIMINATED — OTHERS REMAINING IN RESERVE

- The chase stops.
- Next, the screen display changes to the screen display of the other player, it displays "READY!" under the "GHOST HOUSE" at the same time one of the other player's reserve MS. PAC-MEN appears at the lower center of this maze.
- After a second or two passes, the word "READY!" disappears and play begins for the other player.

MS. PAC-MAN ELIMINATED — NO OTHERS REMAINING IN RESERVE

- Game displays the words "PLAYER ONE" or "PLAYER TWO" above the "GHOST HOUSE" and the words "GAME OVER" below the "GHOST HOUSE".
- Your final score is displayed under "1 UP" or "2 UP", depending upon which player you were. In addition, if your score was the highest on this game to date, it will also be displayed under "HIGH SCORE" at the top center of the monitor screen.
- After this, the screen display changes to the screen display of the other player, it displays "READY!" under the "GHOST HOUSE" at the same time one of the other player's reserve MS. PAC-MEN appears at the lower center of this maze.
- After a second or two passes, the word "READY!" disappears and play begins for the other player.

III. Maintenance and Repair

Your **NEW** game needs certain types of maintenance to keep it in good working order. **CLEAN,** well **MAINTAINED** games **attract players** and **EARN MORE PROFITS.**

The most important thing for you to remember is to run the Self-Test EVERY TIME you collect money from the coin box. **JUST LOOKING** at your game **WILL NOT** tell you if all its controls and inside parts are working correctly. The Self-Test will inform you whether or not your game is working the way it should.

The second most important thing you should remember is to clean the outside of the game and coin acceptor mechanisms on a regular basis.

CLEANING

The outside of the game cabinet plus the metal can be cleaned with any non-abrasive household cleaner. However, the front of the T.V. monitor tube and **both sides** of all other glass and plastic on or in the game MUST be cleaned with anti-static cleaner **ONLY.** For cleaning the coin acceptors, hot soapy water may be used on the plastic ones and any household cleanser may be used on the metal ones. If you wish, special coin machine cleaners that leave no residue may be purchased from your distributor.

DO NOT dry-wipe any of the plastic panels. This is because any dust that was on them can scratch their surfaces. If this has happened, anyone looking through this type of damaged plastic would feel he was looking at the game through a fog. This fogging damage CAN NOT be repaired or reversed. The ONLY solution is to **replace** the damaged piece of plastic.

FUSE REPLACEMENT

This game contains several fuses located as shown in Figure 8.

1. **UPRIGHT MODEL:**
   As viewed from the back, facing the cabinet, with the rear access door removed; the fuses are located on the Transformer Board Assembly.
2. **MINI MODEL:**
   As viewed from the back, facing the cabinet, with the rear access door removed; the fuses are located on the Transformer Board Assembly.
3. **COCKTAIL TABLE MODEL:**
   As viewed from the coin door side of the cabinet, with the monitor tilted open to one side; the fuses are located on the Transformer Board Assembly.

Replace fuses **ONLY** with the type and size listed in the Illustrated Parts Breakdown Section of this manual.

See the T.V. Monitor Manual (available on request from your distributor or monitor manufacturer) and/or the T.V. Troubleshooting Section of this manual for information on these fuses.

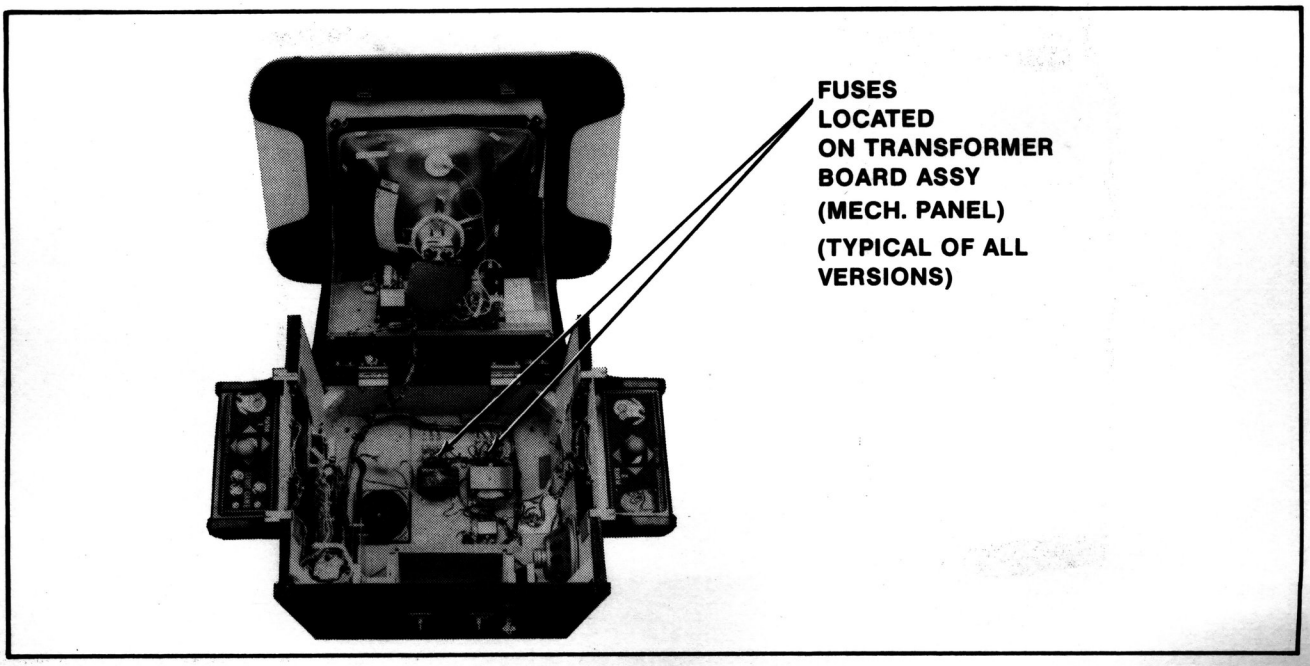

Figure 8 Location of fuses

OPENING THE CONTROL PANEL. See Figure 9.

1. UPRIGHT MODEL:

- The control panel is held in place by three latches, one on the left side, one on the right side, and one on the front center.

  They are spring loaded to provide constant positive pressure on their latch plates.

  They can be reached through the coin door **AFTER turning power to the game off.**

  To release the latches, lift up and toward the center of the control panel.

  Once they are released, unhook them from their latch plates.

- To remove the control panel:

  Raise it up and tilt it toward you until you can see the cable behind it.

  Cradling the control panel between yourself and the cabinet, disconnect it from its cabling.

  The control panel is now free and can be removed.

- To reinstall the control panel, reverse this procedure.

2. MINI MODEL:

- The control panel is held in place by two latches, one on the right side and one on the left side of the cabinet.

  They are spring loaded to provide constant positive pressure on their latch plates.

  They can be reached through the coin door **AFTER turning power to the game off.**

  To release the latches, lift up and toward the center of the control panel.

  Once they are released, unhook them from their latch plates.

- To remove the control panel:

  Raise it up and tilt it toward you until you can see the cable behind it.

  Cradling the control panel between yourself and the cabinet, disconnect it from its cabling.

  The control panel is now free and can be removed.

- To reinstall the control panel, reverse this procedure.

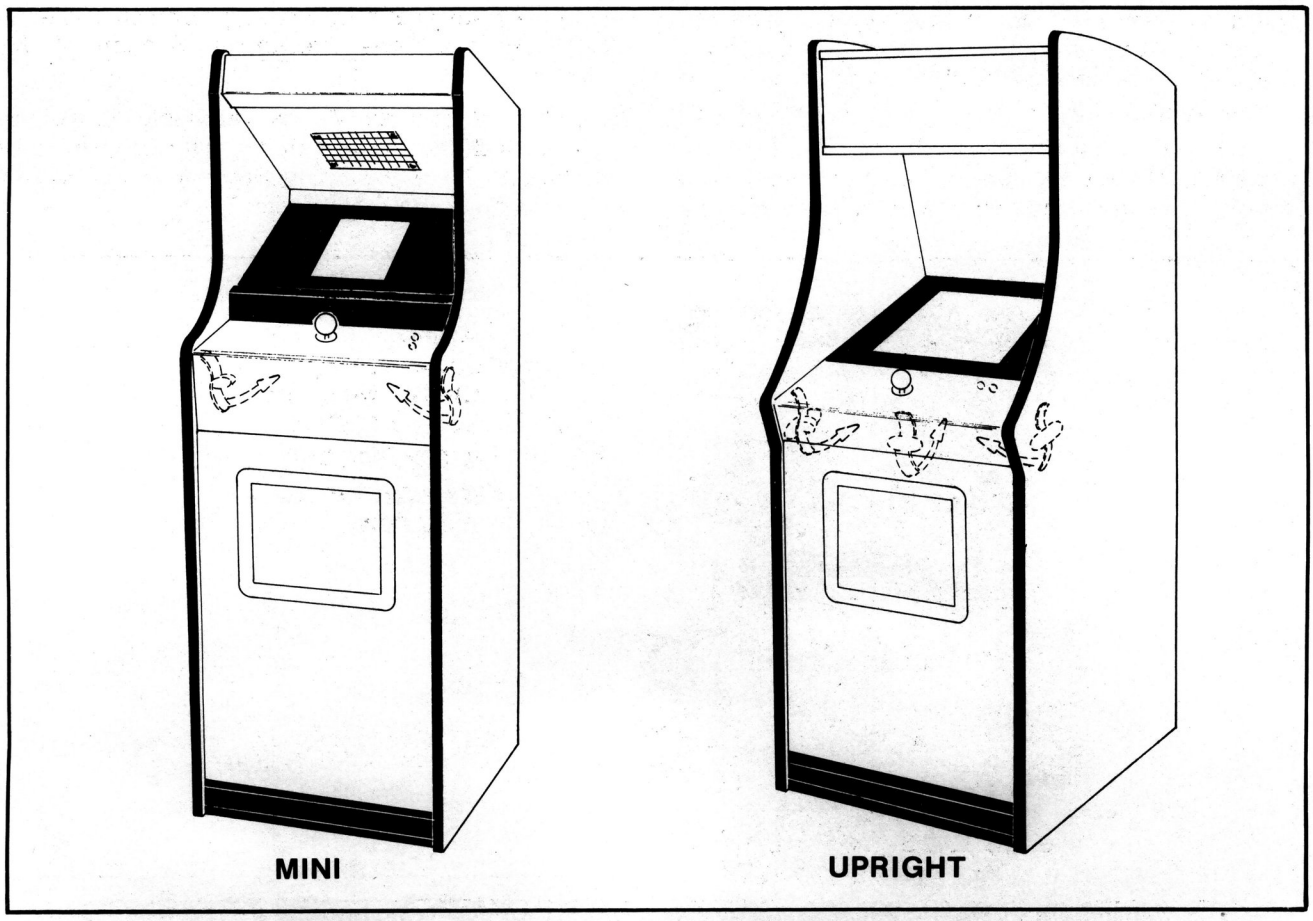

Figure 9 Removing control panel — Upright & Mini games

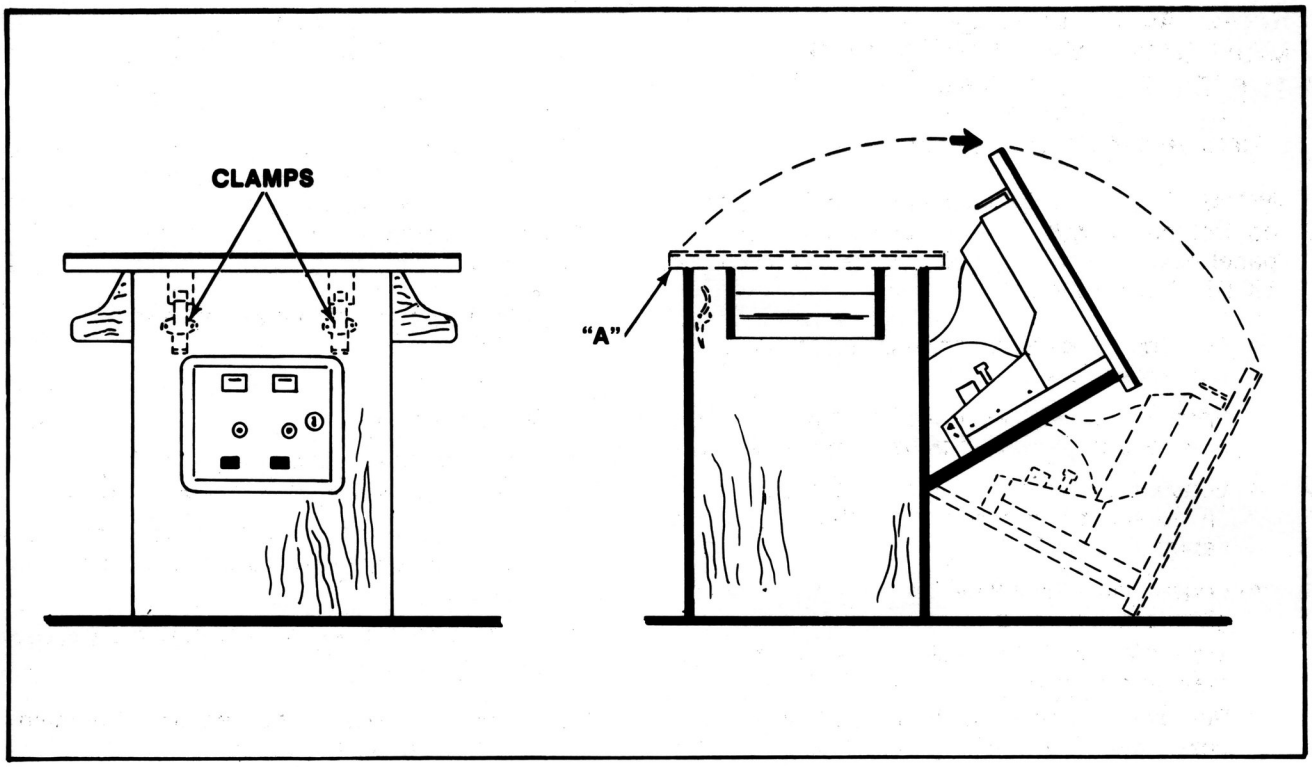

Figure 10 Opening Cocktail game

3. COCKTAIL TABLE MODEL:

- Each control panel is held in place by several screws, two on the inside of the cabinet and three along the outside bottom edge of the control panel.

  Turn power to the game off.

  Open the coin box door and release the two latches indicated in Figure 10.

CAUTION: The right hand latch is very close to the HIGH VOLTAGE on the monitor.

Once they're released, unhook them from their latch plates.

Grasp the table top at "A" and open it as indicated in Figure 10.

CAUTION: Due to the weight of the monitor, **EXTREME CARE MUST** be taken when opening the cabinet.

Remove the screws which secure the control panel in place. See Figure 11.

- To remove the control panel(s):

  Disconnect it from its cabling.

  The control panel is now free and can be removed.

- To reinstall the control panel, reverse this procedure.

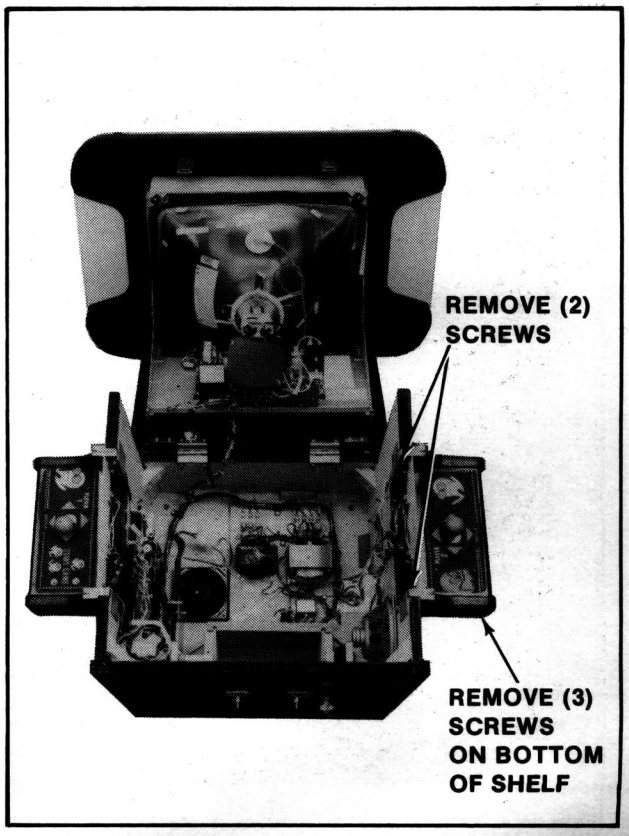

Figure 11 Removing control panel — Cocktail game

REMOVAL OF THE MAIN-DISPLAY-GLASS AND/OR THE T.V. BEZEL ASSEMBLY

1. UPRIGHT MODEL: See Figure 12.

NOTE: To do this, the latches which secure the control panel **MUST** be released. The control panel need not be removed. See the "UPRIGHT MODEL" procedure.

- **Turn the power to the game off** and remove the rear access door.
- Remove the screws from the glass support bracket and lift it out the back of the cabinet.
- Grasp the main-display-glass in the top center, lift up slightly and pull it out the rear of the cabinet.
- Loosen the screws which secure the T.V. bezel-glass-clamps in place.

  Move the clamps to the side and the bezel glass may be removed.

  Remove the above mentioned screws and the bezel with four bezel-glass-clamps may be removed.
- To reinstall the T.V. bezel assembly and the main-display-glass, reverse this procedure.

2. MINI MODEL: See Figure 13.

NOTE: In order to do this, the control panel **MUST** be removed first. See the "MINI MODEL" procedure.

- **Turn the power off to the game** and remove the control panel.
- Remove the screws which secure the glass clamping plate.
- Lift out the glass clamping plate. This frees the main-display-glass so it can be lifted up.
- By putting your finger in the hole in the middle of the main-display-glass support, you can lift it up and out.
- Remove the screws which secure the T.V. bezel assembly and lift it out.

NOTE: Use the hole in the center of the main-display-glass support to grasp it.

- Reverse this procedure to reinstall the T.V. bezel assembly and the main-display-glass.

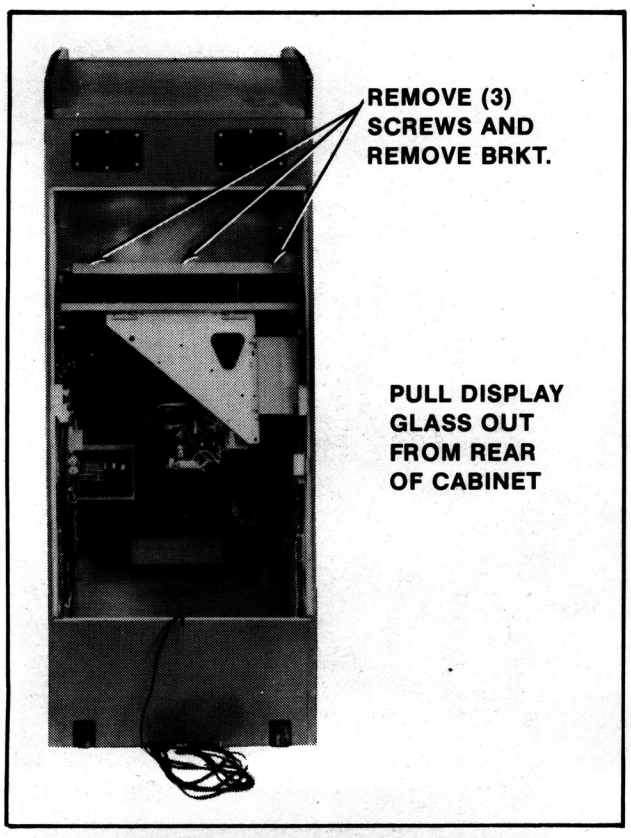

Figure 12 Removing display glass — Upright game

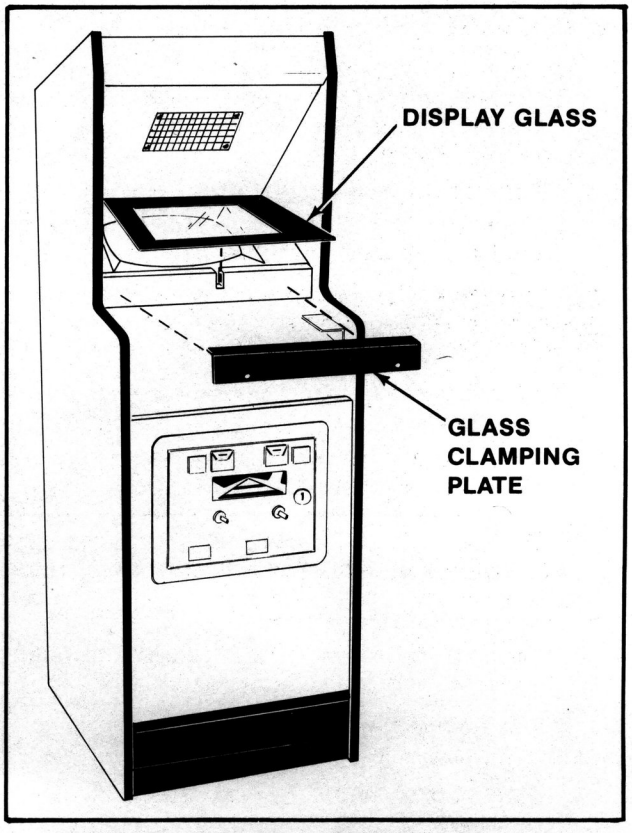

Figure 13 Removing display glass — Mini game

3. COCKTAIL TABLE MODEL: See Figure 14.

NOTE: This may be done with the table top in the open or closed position. If you decide to open the table top, **TURN THE POWER TO THE GAME OFF FIRST.**

- Remove the screws which secure the table top glass clamps in place.
- Remove the table top glass.
- Lift out the T.V. bezel assembly.
- To reinstall the T.V. bezel assembly and the table top glass, reverse this procedure.

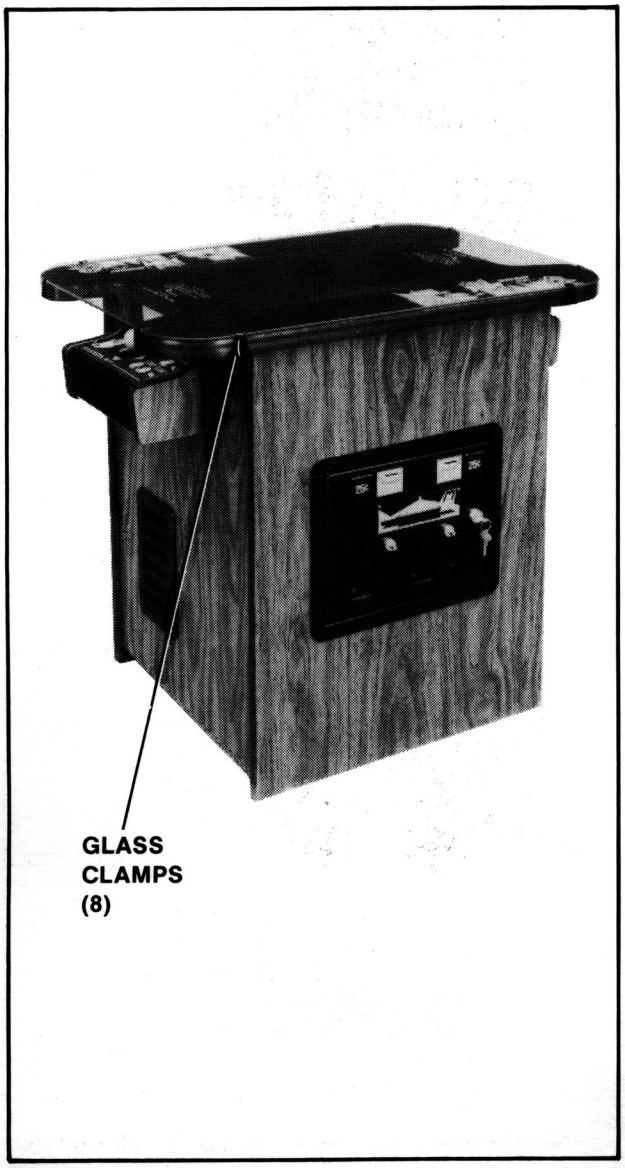

Figure 14 Removing top glass — Cocktail game

T.V. MONITOR REPLACEMENT

CAUTION: High voltages may exist in any television unit, even with the power disconnected. Use EXTREME CAUTION and do not touch electrical parts or the T.V. yoke area with your hands or with metal objects held in your hands!

In addition, BE SURE TO USE HEAVY GLOVES when handling the monitor. You could cut your hands on the metal T.V. chassis without such protection.

DANGER: The T.V. monitor DOES NOT contain an isolation transformer on its chassis (it is mounted instead on the floor of the cabinet). When servicing the monitor on a test bench, YOU MUST ISOLATE THE MONITOR FROM AC VOLTAGE WITH AN ISOLATION TRANSFORMER.

1. UPRIGHT MODEL: See Figure 15.

- **Turn power off to the game.**
- Open the rear access door.
- Completely disconnect the T.V. monitor from all its cabling. **DON 'T FORGET THE CHASSIS GROUND WIRE.**

  Before removing the T.V. monitor, the main-display-glass and bezel **MUST** be removed. See above "Upright Model" procedure.

  With the removal of only four bolts, the T.V. monitor and its mounting channels will be loose.

  The monitor mounting channels slide on top of and against two metal guides mounted to the cabinet's right and left sides. The monitor is removed by sliding it out the back of the cabinet. See Figure 15.

  To reinstall the T.V. monitor, reverse this procedure.

  After replacing the T.V. monitor, be sure to run the game Self-Test.

2. MINI MODEL: See Figure 16.

Turn the power off to the game.

Open the rear access door.

Completely disconnect the T.V. monitor from all its cabling. **DON 'T FORGET THE CHASSIS GROUND WIRE.**

Before removing the T.V. monitor, the main-display-glass and bezel **MUST** be removed. See above "Mini Model" procedure.

With the removal of only four nuts, the T.V. monitor will be loose.

CAUTION: BE SURE to support the T.V. monitor from the rear while removing the four bolts so it will not fall out of the cabinet.

The monitor is removed by supporting it and pulling straight back as shown in Figure 16.

To reinstall the T.V. monitor, reverse this procedure.

After replacing the T.V. monitor, be sure to run the game Self-Test.

3. **COCKTAIL TABLE MODEL:** See Figure 18.

   Turn power off to the game.

   Open the coin box door and release the two latches indicated in Figure 17.

CAUTION: The right hand latch is very close to the HIGH VOLTAGE on the monitor.

- Once the latches are released, unhook them from their latch plates.
- Grasp the table top at "A" and open it as indicated in Figure 17.

CAUTION: Due to the weight of the monitor, EXTREME CARE MUST be taken when opening the cabinet.

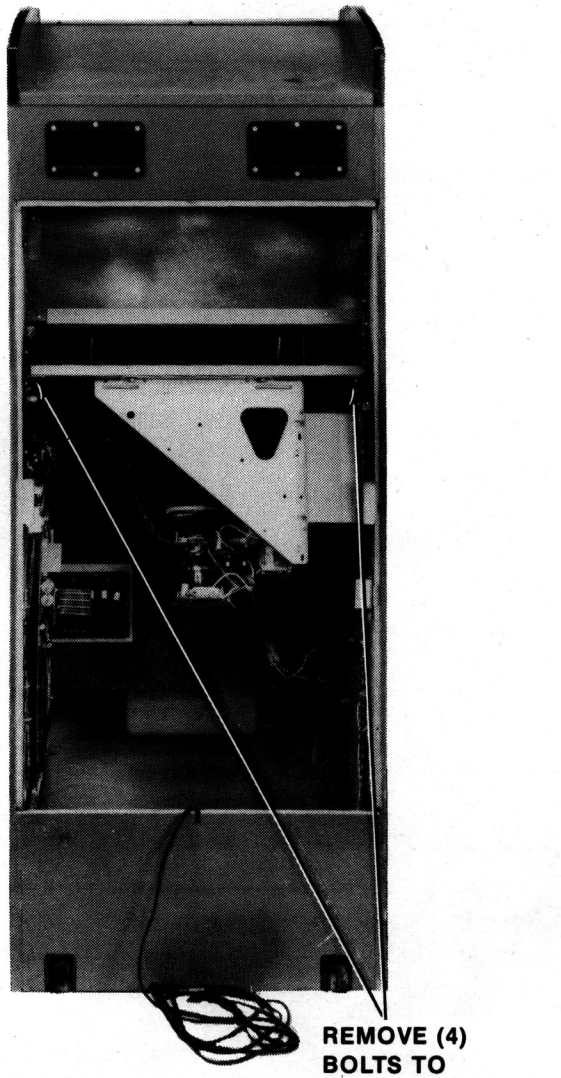

Figure 15 Removing monitor — Upright game

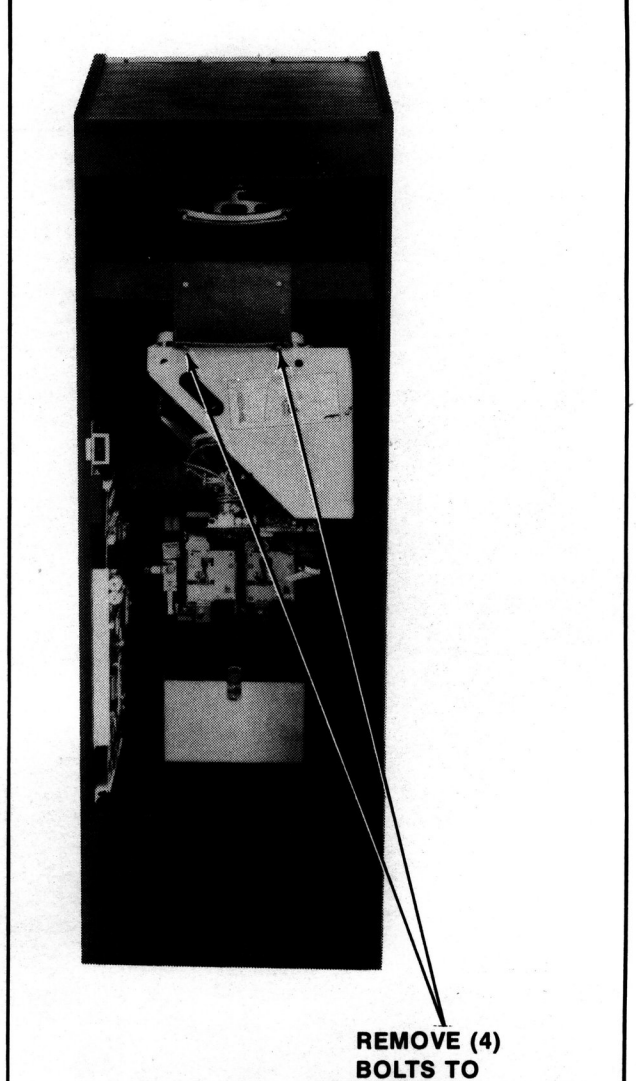

Figure 16 Removing monitor — Mini game

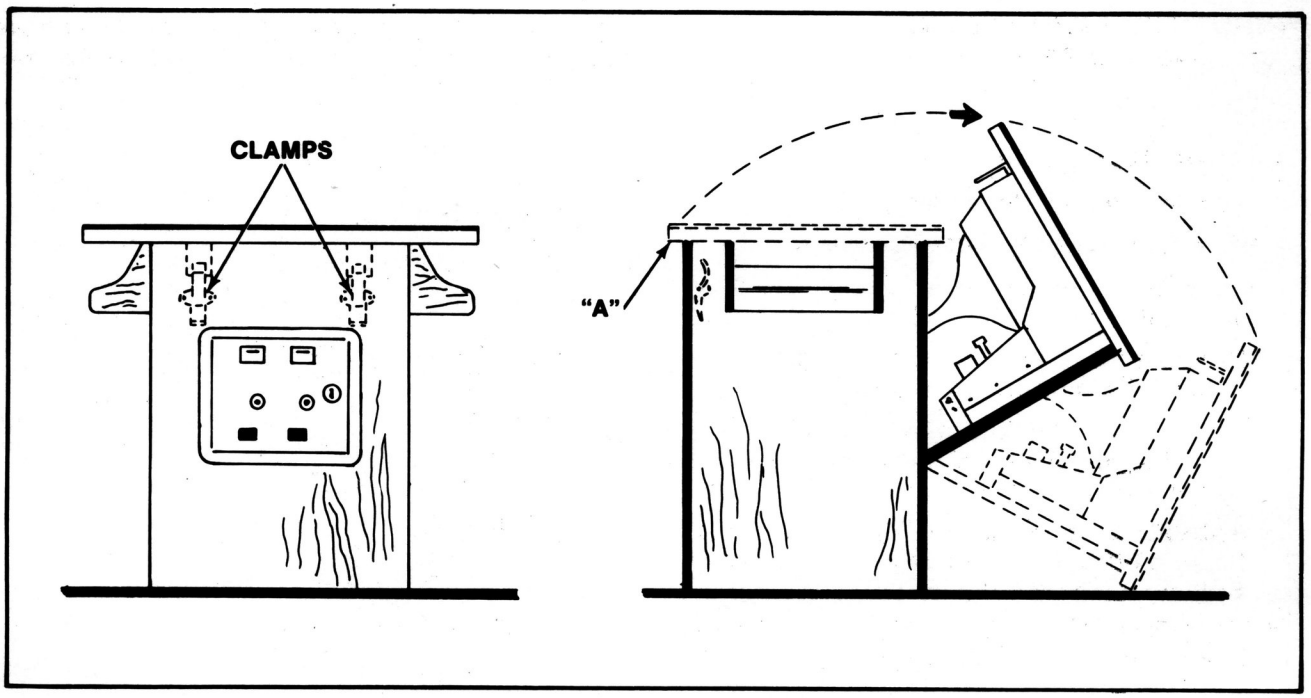

Figure 17 Opening Cocktail game

- Remove the screws which hold the table top glass clamps in place.
- Remove the table top glass.
- Lift out the T.V. bezel assembly.
- Completely disconnect the T.V. monitor from all its cabling. **DON 'T FORGET THE CHASSIS GROUND WIRE.**
- Remove the screws holding the T.V. monitor chassis to the "L" by the door hinge(s). See Figure 18.
- Close the Cocktail Table top and re-latch it.
- Remove the screws which secure the T.V. monitor mounting brackets to the edges of the slot cut in the table top. See Figure 18.
- Pry up the end of each monitor mounting bracket with a screwdriver or similar tool until you can grasp them both.
- Lift the T.V. monitor straight up and out of the table top being VERY CAREFUL not to bump the neck of the picture tube.
- To reinstall the T.V. monitor, reverse this procedure.
- Be sure to check the clearance of the "L" brackets BEFORE setting the monitor into the table top.
- After replacing the T.V. monitor, be sure to run the game Self-Test.

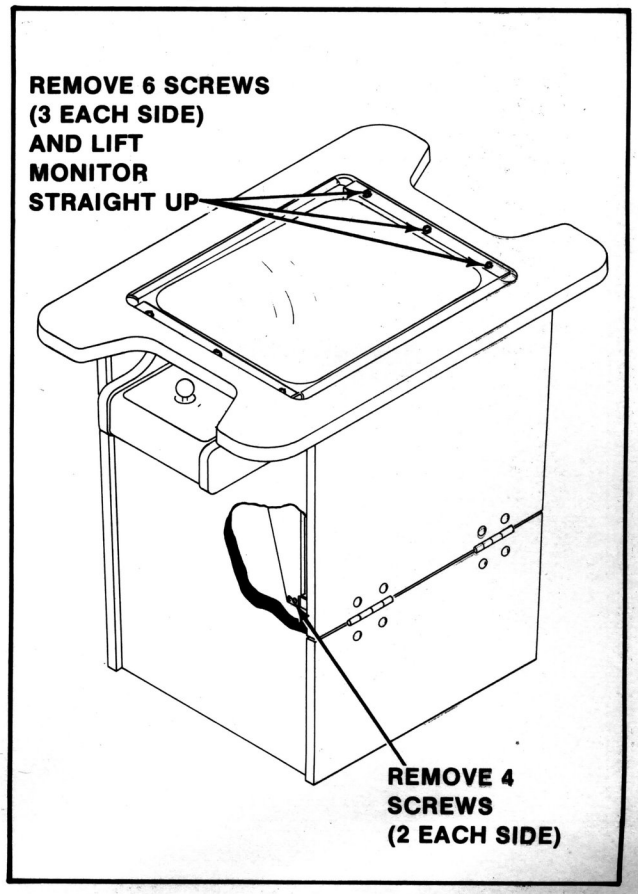

Figure 18 Removing monitor — Cocktail game

PRINTED CIRCUIT BOARD (P.C.B.) REPLACEMENT

NOTE: All P.C.B. connectors are keyed and will **ONLY** fit one way without forcing them. The plugs on the cable harness which connect it to the P.C.B.'s are also keyed and will **ONLY** go onto their connectors one way without forcing them.

1. **UPRIGHT MODEL:** See Figure 19.
   - **Turn the power to the game off.**
   - Unlock and open the rear access door.
   - Disconnect the Main Game Logic Board from all its cabling.
   - Disconnect the Auxiliary Game Logic Board from the Main Game Logic Board.
   - Remove the P.C.B. clamps indicated in Figure 19 and slide the Main Game Logic Board out the back of the cabinet.
   - **CAREFULLY** pop the Auxiliary Game Logic Board off its four snap-in mounting posts and lift it out the back of the cabinet.
   - To reinstall the above P.C.B.'s, reverse this procedure.

2. **MINI MODEL:** See Figure 19.
   - **Turn the power off to the game.**
   - Unlock and open the rear access door.
   - Disconnect the Auxiliary Game Logic Board from the Main Game Logic Board.
   - Remove the P.C.B. clamps indicated in Figure 19 and slide the Main Game Logic Board out the back of the cabinet.
   - **CAREFULLY** pop the Auxiliary Game Logic Board off its four snap-in mounting posts and lift it out the back of the cabinet.
   - To reinstall the above P.C.B.'s, reverse this procedure.

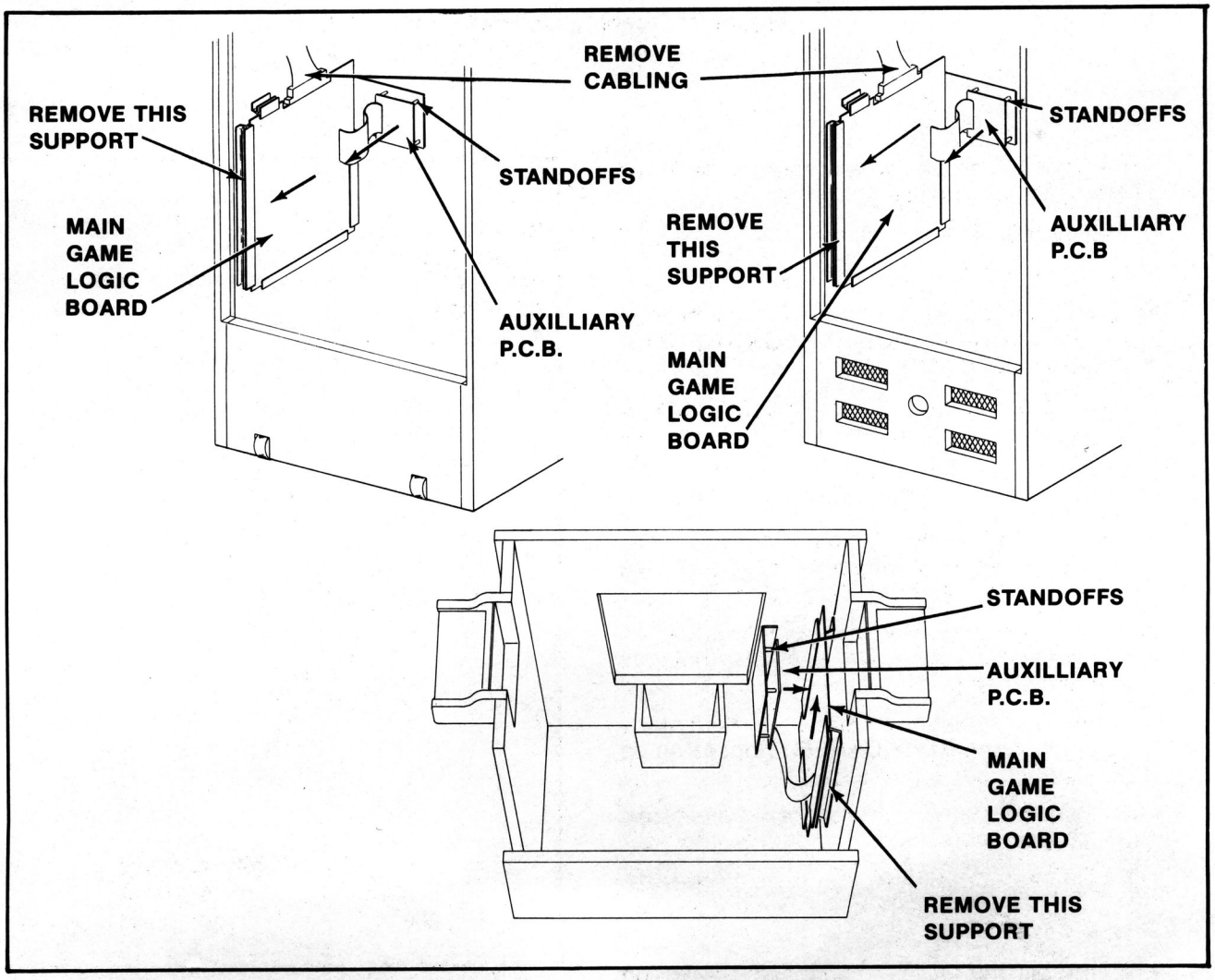

Figure 19 Removing printed circuit boards

3. **COCKTAIL TABLE MODEL:** See Figure 19.

- **Turn the power off to the game.**
- Open the cabinet:
  Open the coin box door and release the two latches indicated in Figure 17.

CAUTION: The right hand latch is very close to the HIGH VOLTAGE on the monitor.

Once they're released, unhook them from their latch plates.

- Grasp the table top at "A" and open it as indicated in Figure 17.

CAUTION: Due to the weight of the monitor, EXTREME CARE MUST be taken when opening the cabinet.

- To remove the Main and Auxiliary Game Logic Boards. See Figure 19.
  Disconnect the Auxiliary Game Logic Board from the Main Game Logic Board.
  Remove the P.C.B. clamps indicated in Figure 19 and slide the Main Game Logic Board out of the cabinet.
  CAREFULLY pop the Auxiliary Game Logic Board off its four snap-in mounting posts and lift it out of the cabinet. See Figure 19.
- To reinstall the above P.C.B.'s, reverse this procedure.

OPENING THE ATTRACTION PANEL

1. **UPRIGHT MODEL:** See Figure 20.

- **Turn the power to the game off.**
- Opening the attraction panel:
  Remove the screws which secure the top bracket in place. (They are on its top side.) See Figure 20.
  Remove the top bracket and slide up the attraction panel. This exposes the attraction panel fluorescent light tube and its mounting bracket assembly. See Figure 20.
  To reinstall the attraction panel, reverse this procedure.
- The fluorescent light tube may be replaced at this time. BE CAREFUL NOT TO DROP IT.

WARNING: If you drop a fluorescent tube and it breaks, IT WILL IMPLODE! Shattered glass can fly six (6) feet or more from the implosion. Use care when replacing any fluorescent tube.

- Replacing the fluorescent tube starter. See Figure 21.
  Be sure the power to the game has been turned off.
  Grasp the starter (it is on the back of the mounting bracket), give it a quarter turn, and remove it from its socket.
  To replace the fluorescent light tube starter, reverse this procedure.
- Replacement of the fluorescent tube mounting bracket assembly. See Figure 22.
  Be sure the power is off to the game.
  Disconnect it from its power cable.
  Remove the screws at its right and left hand sides which secure it and gently slide it out the front of the cabinet, being careful not to catch its power cable on anything.
  To reinstall the fluorescent tube mounting bracket assembly, reverse this procedure.
- Replacing the speaker. See Figure 22.
  Be sure the power is off to the game.
  Remove the attraction panel and disconnect the speaker from its cabling.
  Remove the nuts and bolts which secure the speaker and speaker grill in place and set them and the speaker grill aside.
  Once the bolts which secure the speaker in place are removed, the speaker may be removed through the opening where the attraction panel was.
  Reverse this procedure to reinstall the speaker.

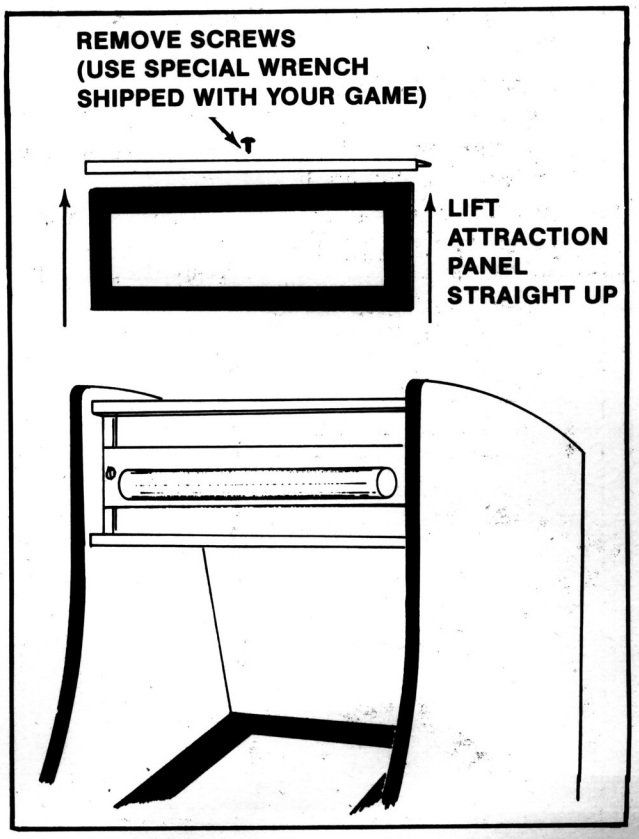

Figure 20 Removing attraction panel — Upright game

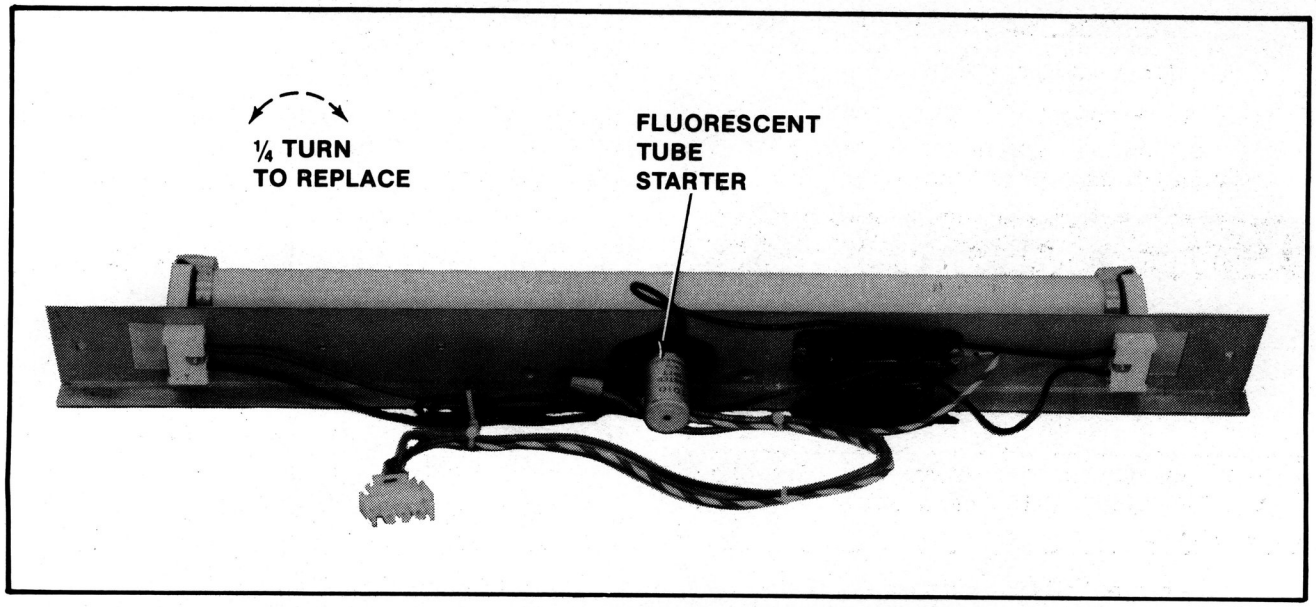

Figure 21 Replacing fluorescent starter — Upright game

2. **MINI MODEL:** See Figure 23.
   - **Turn the power off to the game.**
   - Remove the screws from the top and bottom of the formed attraction panel.
   - Remove the formed attraction panel by pulling it straight away from the cabinet. This exposes the attraction panel light bulbs and their mounting board.
   - To service the light bulbs and their mounting board:

     Turn the power to the game back on so you can see which bulbs are burnt out.

     Mark the burnt out bulbs and **turn the power to the game back off again.**

     To replace the burnt out bulbs, grasp them gently and pull straight out.

     The new bulbs are gently pushed into the empty sockets.

     To completely replace the light bulb mounting board:

     Open the cabinet rear access door and unplug the mounting board from its power cable.

     Remove the screws that hold the mounting board to the cabinet.

     Gently slide the mounting board out the front of the cabinet being careful not to catch its cable on anything.

     To reinstall the above removed items, reverse this procedure.

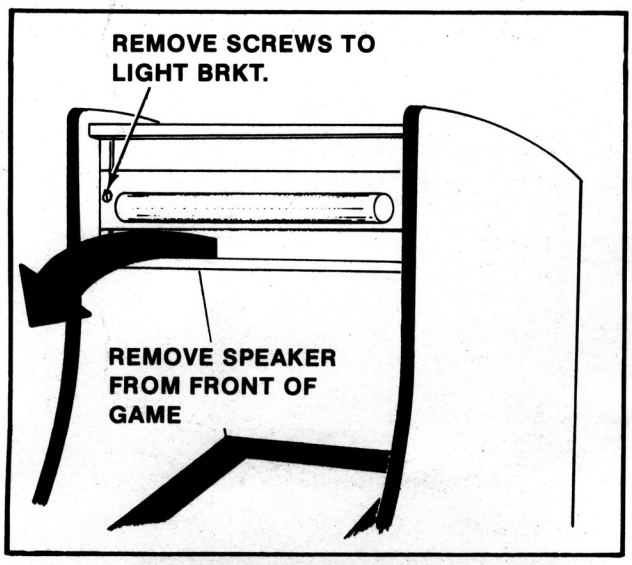

Figure 22 Replacing fluorescent light mounting bracket & speaker — Upright game

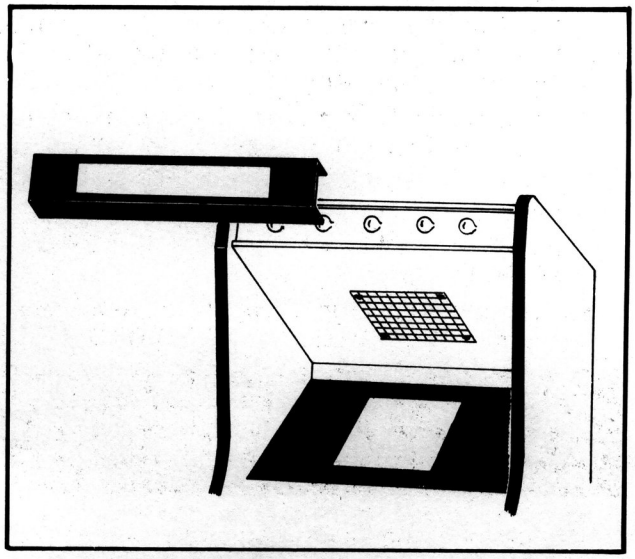

Figure 23 Removing attraction panel — Mini game

- To replace the speaker. See Figure 24.

  Be sure the power is off to the game.

  Disconnect the speaker from its cabling.

  Remove the nuts and bolts securing the speaker.

  Slide the speaker out through the rear access door.

  To reinstall the speaker, simply reverse this procedure.

3. **THE COCKTAIL TABLE MODEL HAS NO BACK-LIT ATTRACTION PANEL.**

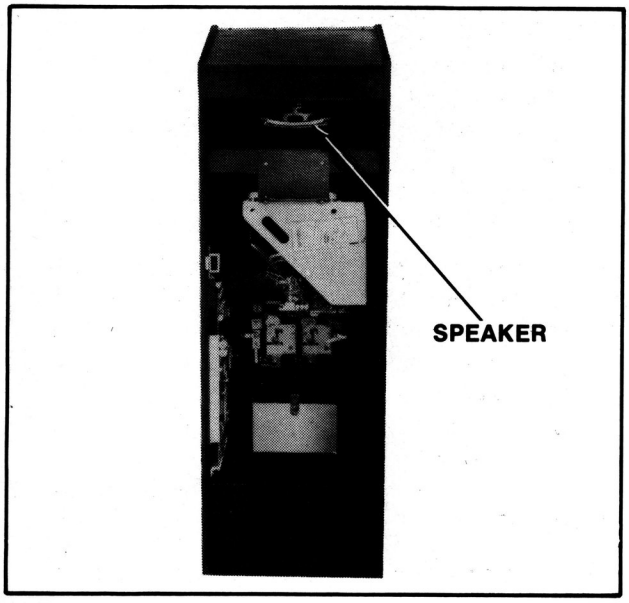

Figure 24 Replacing speaker — Mini game

COIN DOOR MAINTENANCE

METAL COIN ACCEPTOR MECHANISMS

Periodically, the metal coin acceptor mechanism(s) must be removed from the coin door and cleaned.

1. **Make sure the power to the game is off.**
2. Unlock and open the coin door.
3. Remove the coin acceptor mechanism as shown in Figure 25.
   - Push down on the two spring loaded latches.
   - While holding the latches down, pull the top of the coin acceptor mechanism toward you.
   - Release the latches and lift out the coin acceptor mechanism.
4. Clean the magnet of all foreign particles. See Figure 26.
   - This may be accomplished by swinging the gate open as shown in the above figure.
5. Remove the cradles and undersize levers and clean the bushings. (A pipe cleaner makes a good bushing cleaner.)
   - Also clean the pivot pin.
6. Whenever needed, the coin acceptor should be cleaned with hot water and cleanser in the following manner:
   - Place the coin acceptor in boiling water for about ten minutes.

CAUTION: BE CAREFUL NOT TO BURN YOURSELF.

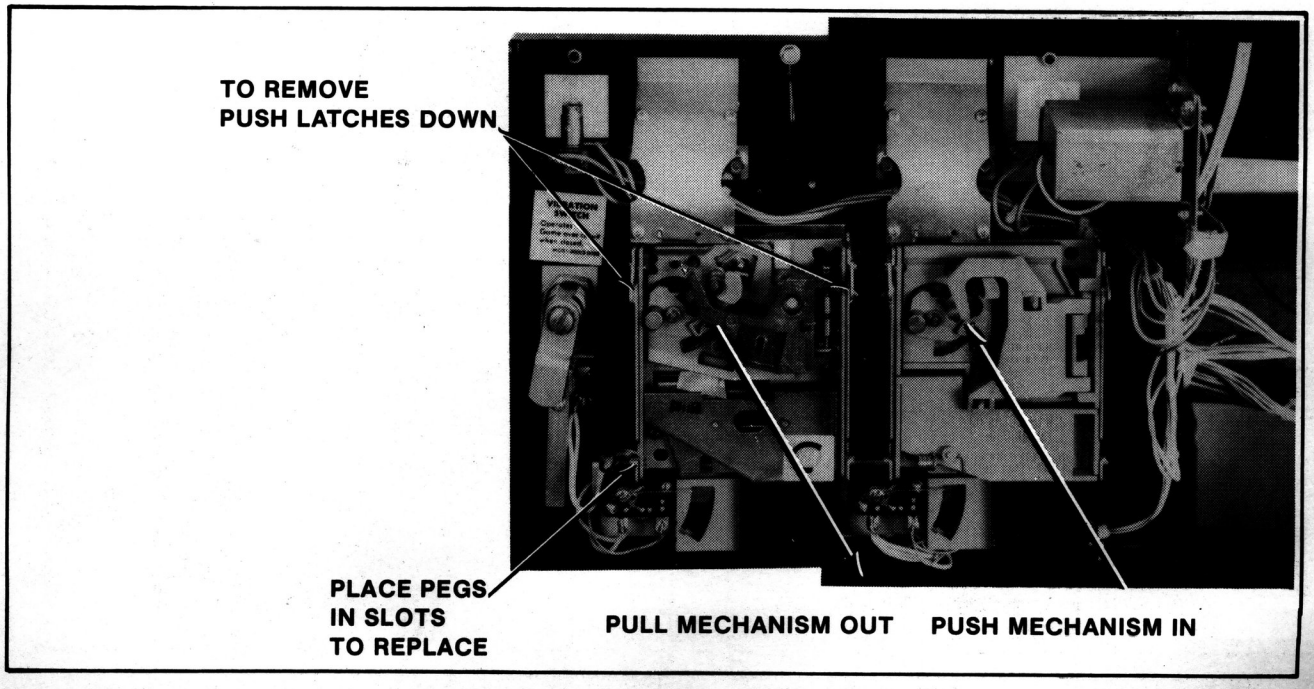

Figure 25 Removing and replacing coin acceptor

- Next, use a brush and kitchen cleaner to remove all remaining foreign matter from the unit.
- Rinse the coin acceptor in clean boiling water.
- Dry the coin acceptor thoroughly by using filtered compressed air to blow it dry.

NOTE: The reason we recommend using boiling water is that it evaporates faster than cold water and speeds drying time.

7. To lubricate the coin acceptor:
   - Use **ONLY** powdered graphite and put it **ONLY** on the moving parts of the coin acceptor. These parts are called out in Figure 27.
   - Be extremely careful to keep the powdered graphite away from paths that are traveled by the coins.

WARNING:
DO NOT USE OIL TO LUBRICATE THE COIN ACCEPTOR.

8. Check the coin chute for obstructions such as: paper, gum, etc.
9. Reinstall the coin acceptor to the coin door. See Figure 25.
   - Place the two pegs at the coin acceptor's base into their retaining slots.
   - Now push the top of the coin acceptor toward the coin door until it snaps in place and is held there by the two spring loaded latches.
10. Close and lock the coin door.

PLASTIC COIN ACCEPTOR MECHANISMS

The plastic coin acceptor mechanism(s) must be removed periodically from the coin door and cleaned.

1. **Make sure the power to the game is off.**
2. Unlock and open the coin door.
3. Remove the coin acceptor mechanism(s) as shown in Figure 25.
   - Push down on the two spring loaded latches.
   - While holding the latches down, pull the top of the acceptor mechanism toward you.
   - Release the latches and lift out the mechanism.
4. Squeeze the two pins indicated in Figure 28 together to open the mechanism and break it down into its three basic parts.
   - Clean the mechanism in hot soapy water. It never rusts.
   - Rinse the mechanism in clean hot water and allow it to dry.
   - Reassemble the mechanism (it never needs lubrication).

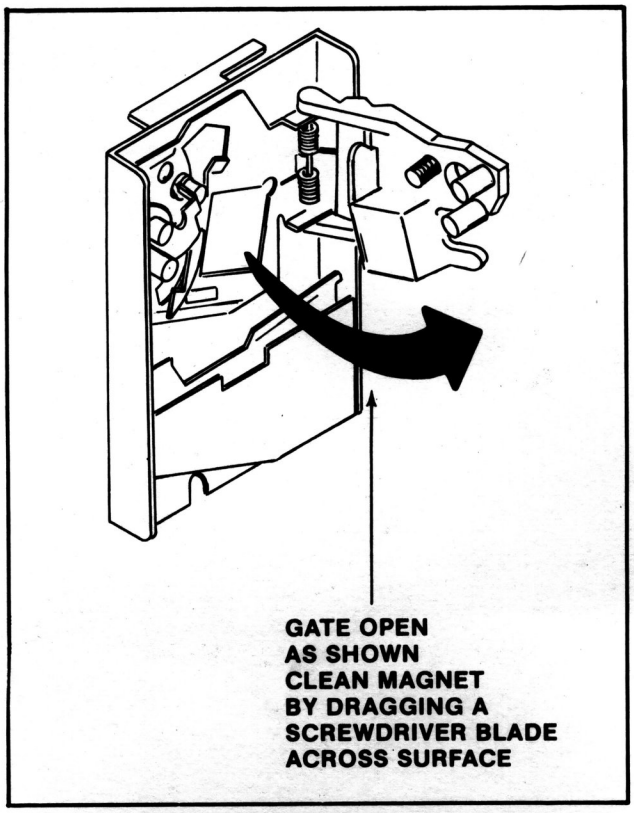

Figure 26 Cleaning the metal coin acceptor

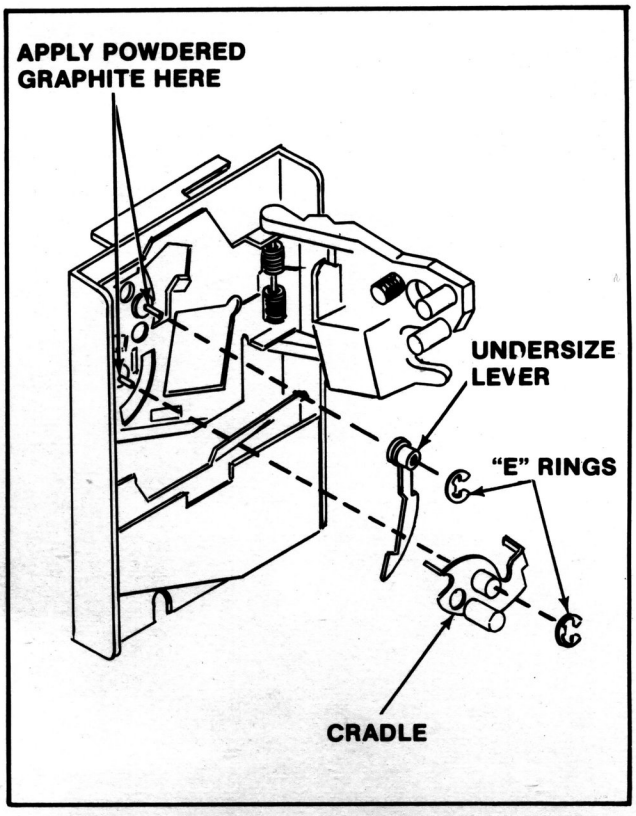

Figure 27 Lubricating the metal coin acceptor

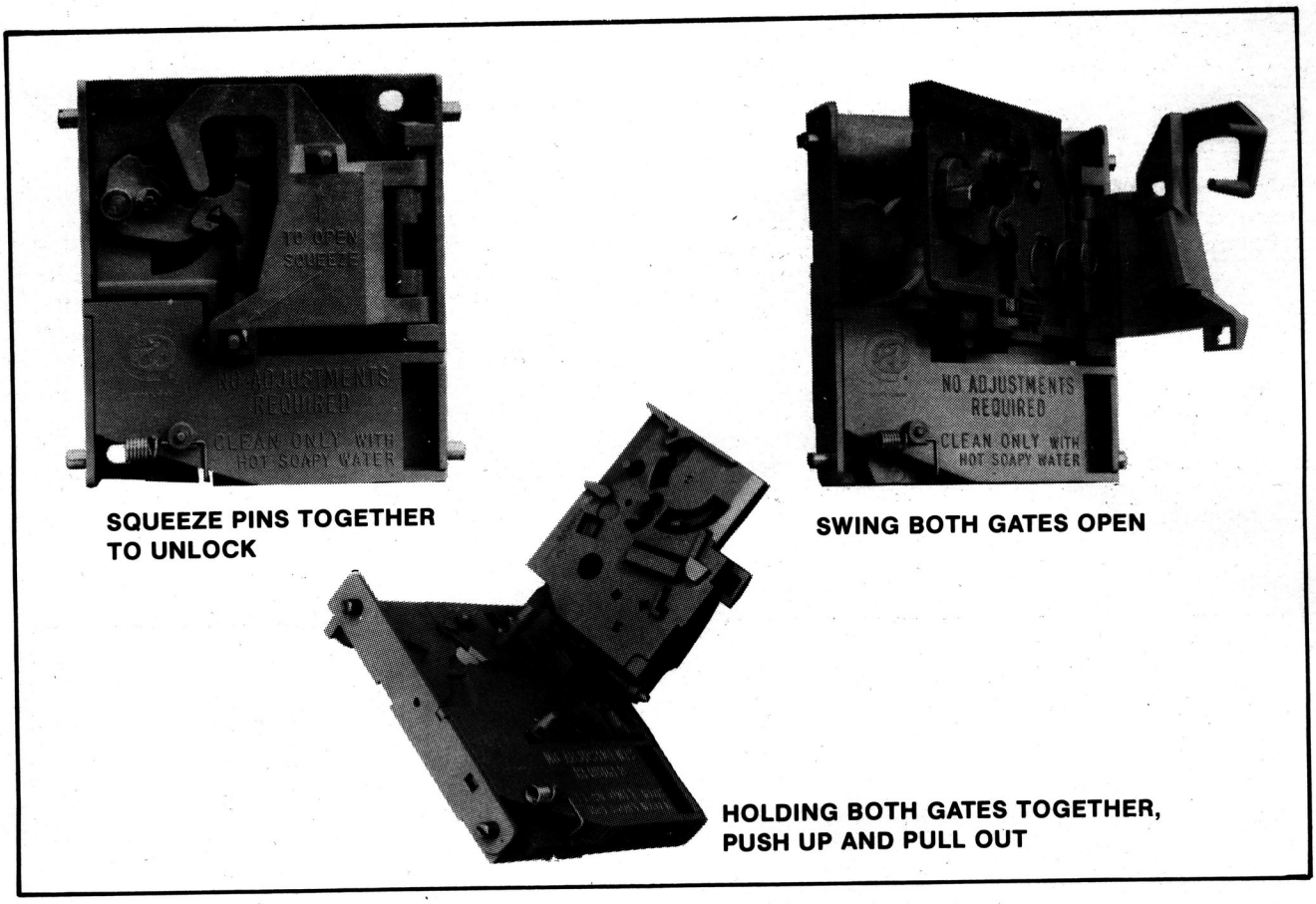
TO OPEN SQUEEZE
NO ADJUSTMENTS REQUIRED
CLEAN ONLY WITH HOT SOAPY WATER
SQUEEZE PINS TOGETHER TO UNLOCK
NO ADJUSTMENTS REQUIRED
CLEAN ONLY WITH HOT SOAPY WATER
SWING BOTH GATES OPEN
HOLDING BOTH GATES TOGETHER, PUSH UP AND PULL OUT

Figure 28 Opening the plastic coin acceptor

5. Check the coin chute for obstructions such as: paper, gum, etc.
6. Reinstall the coin acceptor to the coin door. See Figure 25.
   - Place the two pegs at the coin acceptor's base into their retaining slots.
   - Now push the top of the coin acceptor toward the coin door until it snaps in place and is held there by the two spring loaded latches.
7. Close and lock the coin door.

NOTE: See Figure 29 for instructions on how to set the plastic coin acceptor mechanisms to either accept or reject Canadian quarters.

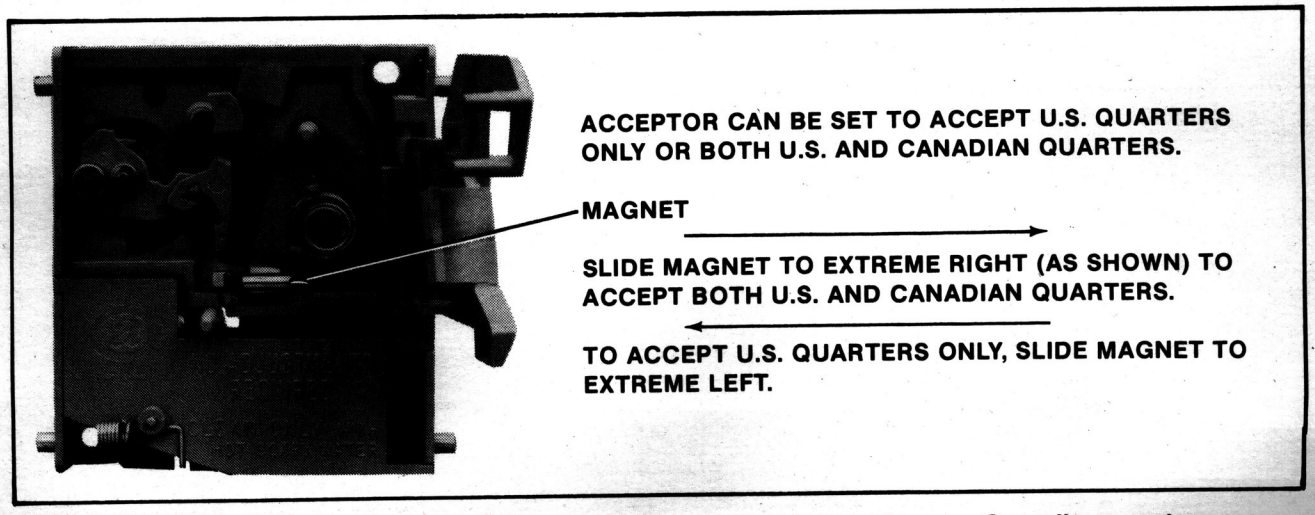
ACCEPTOR CAN BE SET TO ACCEPT U.S. QUARTERS ONLY OR BOTH U.S. AND CANADIAN QUARTERS.
MAGNET
SLIDE MAGNET TO EXTREME RIGHT (AS SHOWN) TO ACCEPT BOTH U.S. AND CANADIAN QUARTERS.
TO ACCEPT U.S. QUARTERS ONLY, SLIDE MAGNET TO EXTREME LEFT.

Figure 29 Changing the plastic coin acceptor to accept American or Canadian quarters

LEVEL OF DIFFICULTY MODIFICATION

In order to increase the level of difficulty with which your MS. PAC-MAN game plays, a jumper wire must be installed as described below.

NOTE: Installing this jumper wire will definitely make your MS. PAC-MAN game **CONSIDERABLY more difficult to play.** However, if you desire a more difficult game (say, one for **ADVANCED** players), the jumper wire may be installed as follows:

1. Remove the Main Game Logic Board as described elsewhere in this manual.
2. Remove the coating of green insulatory material over the two halves of the jumper pad shown in Figure 30. **BE CAREFUL NOT TO DAMAGE THE FOIL OF THE JUMPER PAD IN ANY WAY.**
3. Solder in a jumper wire connecting the two halves of the pad.

NOTE: If you are not sure if you'll want to leave the jumper wire connected or not, you may wish to install a small toggle or slide switch in your jumper wire and secure it to the cable harness to keep it from shorting out any components on the Main Game Logic Board.

4. When finished, reinstall the Main Game Logic Board as described elsewhere in this manual.

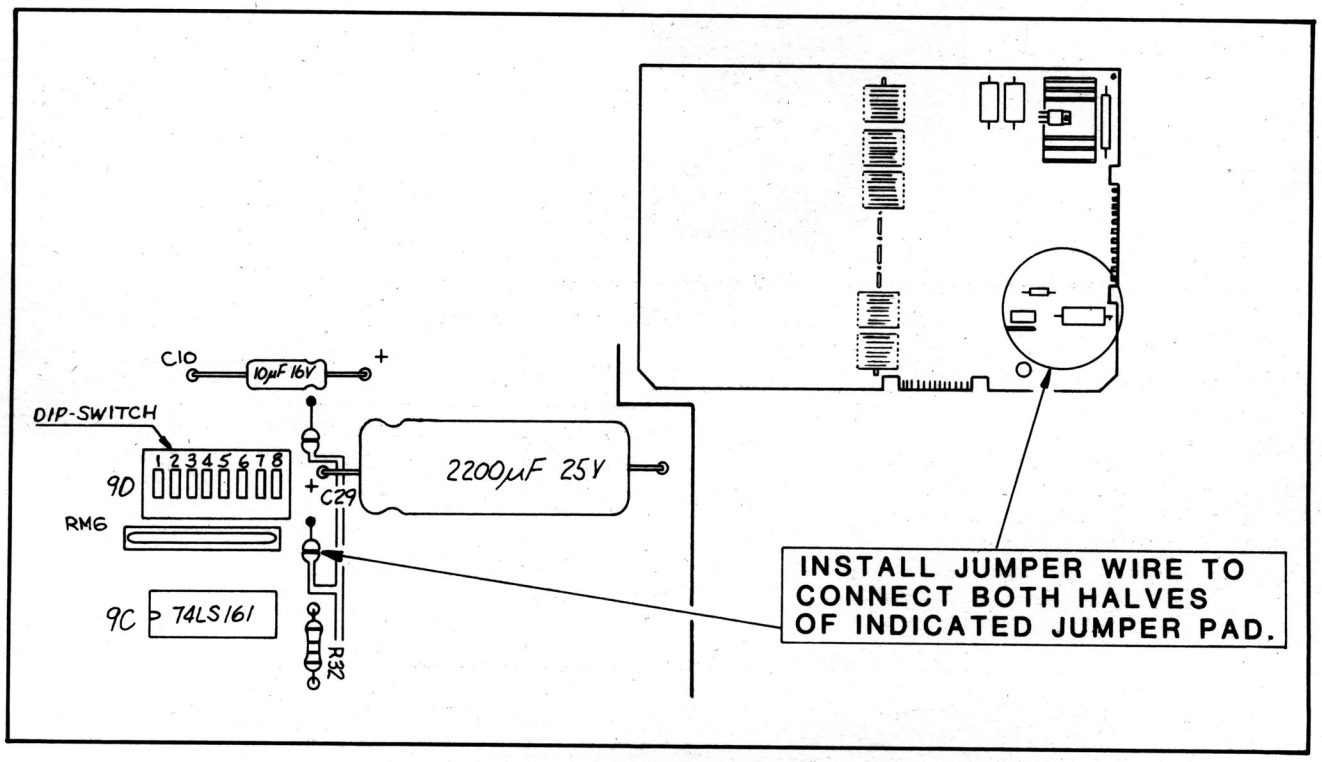

Figure 30 Changing difficulty level of game

IV Illustrated Parts Breakdown

NO. 595 — MS. PAC-MAN — UPRIGHT — HEADER FLUORESCENT LIGHT ASSY.

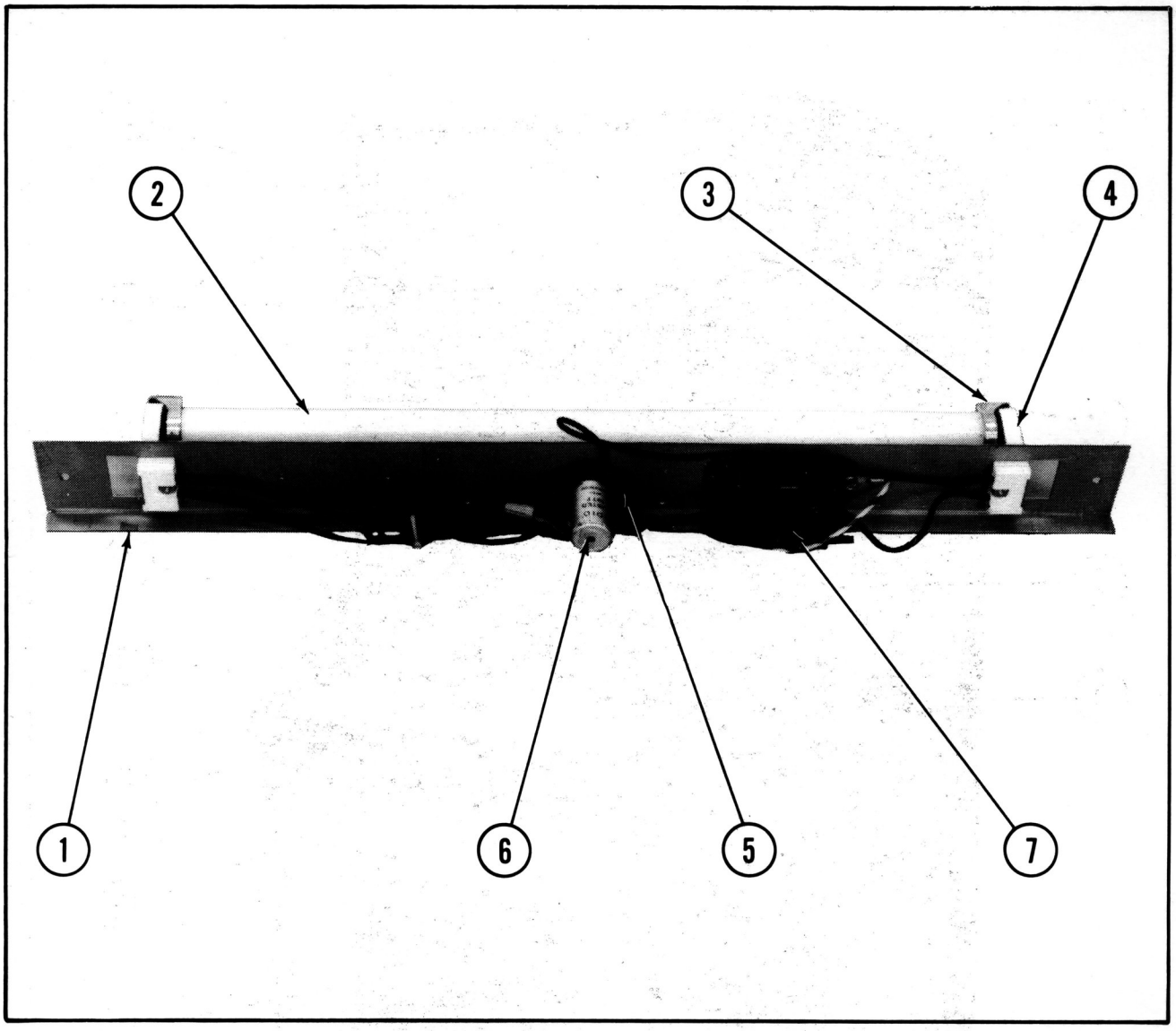

NO. 595 — MS. PAC-MAN — UPRIGHT — HEADER FLUORESCENT LIGHT ASSY. — PARTS LIST

*ORDER BY PART NUMBER **ONLY***

ITEM	PART NO.	DESCRIPTION
1	0595-00105-0000	FLUORESCENT BRKT.
2	0017-00003-0043	18" COOL WHITE FLUOR. LAMP
3	0017-00021-0005	FLUORESCENT LOCKS (2 REQ'D.)
4	0017-00031-0036	FLUORESCENT SOCKET (2 REQ'D.)
5	0017-00003-0412	FLUOR. STARTER HOLDER W/LEADS
	0017-00101-0573	#6-32 x 1/2 PHIL. RND. HD. M.S. (4 REQ'D.)
	0017-00104-0009	#6 EXT. WASHER (4 REQ'D.)
6	0017-00003-0019	FLUOR. STARTER
7	0017-00003-0026	BALLAST
	0017-00101-0598	#8-32 x 5/16 SLT. HEX HD. SCR. (4 REQ'D.)
	A961-00042-0000	LINE FILTER ASSY. — NOT SHOWN

NO. 595 — MS. PAC-MAN — UPRIGHT — FRONT

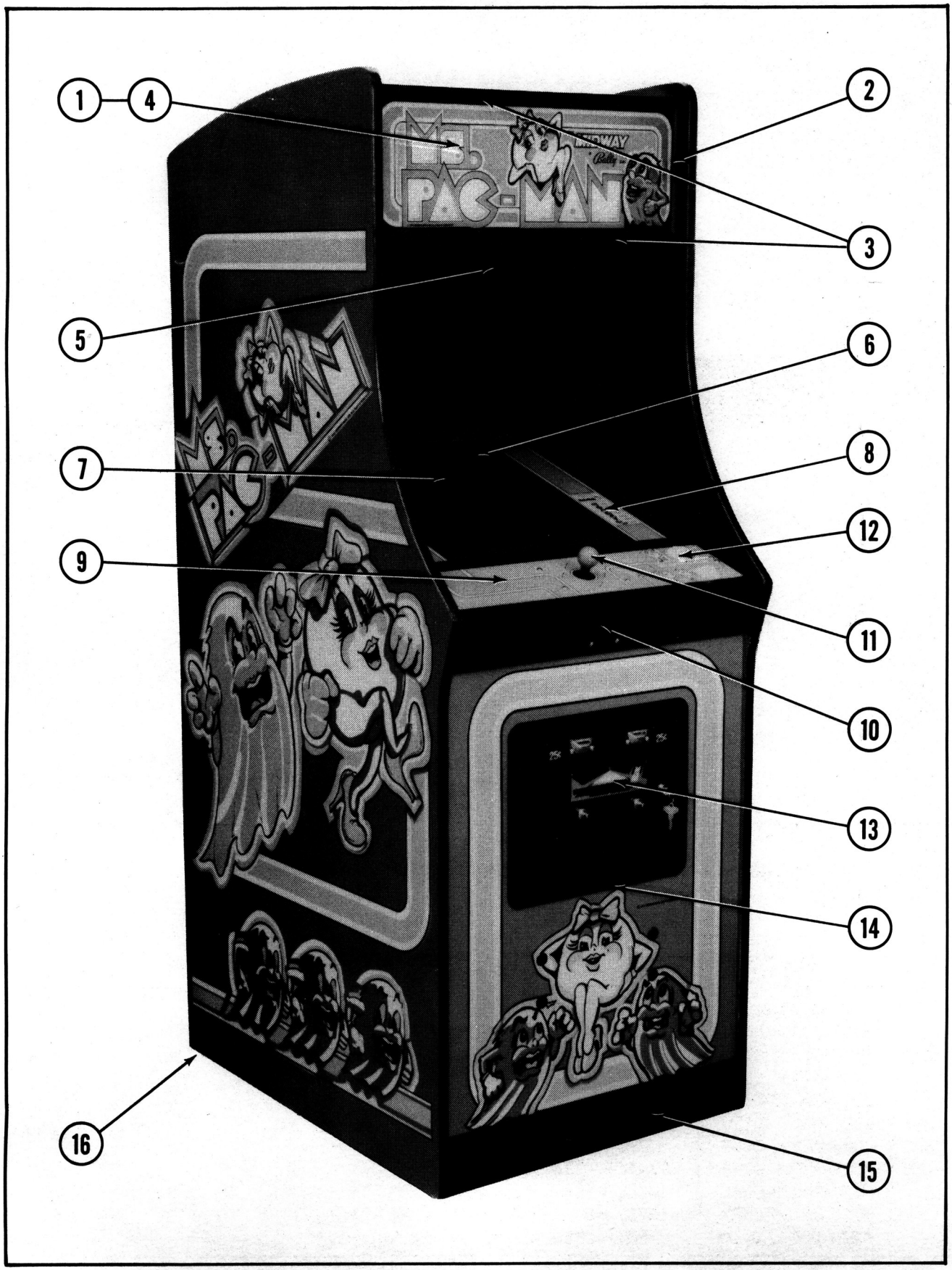

NO. 595 — MS. PAC-MAN — UPRIGHT — FRONT — PARTS LIST

*ORDER BY PART NUMBER **ONLY***

ITEM	PART NO.	DESCRIPTION
1	0595-00901-00XF	DECORATIVE HEADER PLEXI — 23" x 9-1/16" x 3/16"
2	0537-00903-0057	GLASS CHANNEL — 7-5/8" LG. (2 REQ'D.)
3	0508-00104-00XF	UPPER/LOWER HEADER RETAINER (2 REQ'D.)
	0017-00101-0138	#8 x 5/8 TORX TAMPER RESISTANT SCR. (6 REQ'D.)
	0017-00009-0522	LONG ARM KEY T-20 (FOR ABOVE SCREW)
4	A595-00011-0000	FLUORESCENT HEADER ASSY.
5	0017-00009-0393	BLACK SPEAKER GRILLE W/SLOTS
	0017-00003-0259	6" x 9" SPEAKER 8 OHM, 7W.
	0017-00101-0127	#8-32 x 1-1/2 CARRIAGE BOLT (4 REQ'D.)
	0017-00103-0061	#8-32 HEX NUT W/SEMS (4 REQ'D.)
6	0508-00900-0000	19" C.R.T. BEZEL
7	0508-00905-0000	T.V. PLEXI-GLASS (SMOKED) — 17-3/8" x 13-1/4" x 1/8"
	0508-00901-0000	PLEXI-GLASS CLIPS (4 REQ'D.)
	0017-00101-0017	#6 x 1/2 SLT. HEX HD. BLK. SCR. (4 REQ'D.)
8	0595-00900-00XF	MAIN VIEWING GLASS — 23" x 21-1/8" x 3/16"
	0508-00108-0000	GLASS STOP BRKT.
	0017-00101-0027	#8 x 3/4 SLT. HEX HD. M.S. (3 REQ'D.)
9	0595-00903-0000	CONTROL SHELF DECORATIVE OVERLAY
10	A595-00007-00XF	CONTROL SHELF PLATE W/STRIKE ASSY.
	0017-00101-0620	#8-32 x 1/2 CARRIAGE BOLT (10 REQ'D.)
	0017-00103-0061	#8-32 HEX NUT W/SEMS (10 REQ'D.)
	0017-00101-0341	#6 x 1/4 PHIL. TRS. HD. SCR. (4 REQ'D.)
	0508-00115-0000	CENTER CONTROL SHELF LOCK BRKT.
	0961-00115-00XF	STRIKE (2 REQ'D.)
	0017-00009-0033	LATCH CLAMP (3 REQ'D.)
	0595-00106-0100	CONTROL SHELF MTG. BRKT. — RIGHT
	0595-00106-0200	CONTROL SHELF MTG. BRKT. — LEFT
	0555-00901-0000	LOCATING PIN (PLASTIC) (4 REQ'D.)
	0017-00101-0141	#8 x 11/16 UNSLOT. HEX HD. M.S. (14 REQ'D.)
	A595-00017-0000	CONTROL SHELF CABLE ASSY.
11	A595-00005-0000	CONTROL ASSY.
12	0017-00042-0260	PUSH BUTTON ASSY. — WHITE (2 REQ'D.)
	0017-00032-0093	PUSH BUTTON SWITCH W/HOLDER (2 REQ'D.)
	0017-00103-0054	5/8-11 PAL NUT (2 REQ'D.)
13	A090-00300-07BK	U.S.A. COIN DOOR ASSY. — 25¢
14	0090-00002-04BK	LARGE COIN DOOR FRAME
	0017-00101-0121	#6-32 x 5/16 PHIL. TRS. HD. SCR. (3 REQ'D.)
	A595-00019-0000	COIN DOOR CABLE ASSY.
15	0935-00906-0100	KICK PLATE — 23" LG.
16	0017-00102-0048	3/8-16 x 2" LEG LEVELERS (4 REQ'D.)
	0017-00103-0026	3/8-16 LEG LEVELER HEX NUTS (4 REQ'D.)

NO. 595 — MS. PAC-MAN — UPRIGHT — REAR ACCESS

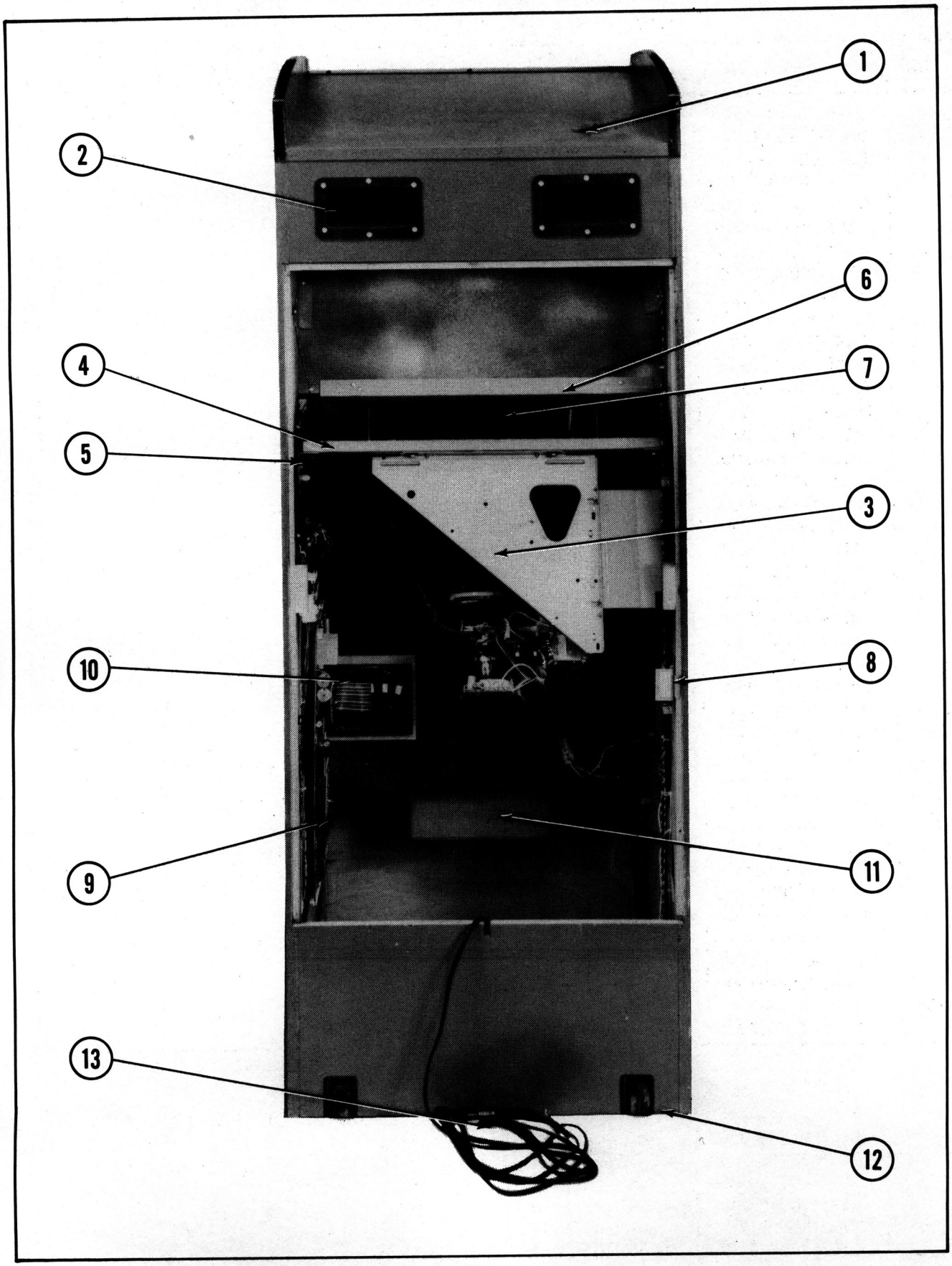

NO. 595 — MS. PAC-MAN — UPRIGHT — REAR ACCESS — PARTS LIST

*ORDER BY PART NUMBER **ONLY***

ITEM	PART NO.	DESCRIPTION
1	A088-00013-0000	ON-OFF SWITCH & BRKT. ASSY.
2	0894-00916-0000	RECESSED HAND LIFT (2 REQ'D.)
	0017-00101-0141	#8 x 11/16 UNSLOT. HEX HD. M.S. (12 REQ'D.)
3	0017-00003-0339	ELECTROHOME — 19" COLOR DUAL SYNC. HORIZ. MTG. MONITOR (OR)
3	0017-00003-0401	WELLS-GARDNER — 19" COLOR DUAL SYNC. HORIZ. MTG. MONITOR
4	A508-00005-0000	MONITOR MTG. CHANNEL ASSY. (2 REQ'D.)
	0017-00102-0066	1/4-20 x 3/4 UNSLOT. HEX HD. BOLT (4 REQ'D.)
	0017-00104-0014	7/8" DISH WASHER (4 REQ'D.)
5	0595-00104-0000	MONITOR RAIL (2 REQ'D.)
	0017-00102-0002	1/4-20 x 1/2 SLT. HEX HD. BOLT (4 REQ'D.)
	0017-00104-0014	7/8" DISH WASHER (4 REQ'D.)
	0866-00120-0000	CHASSIS BRACE
6	0508-00106-0000	T.V. BEZEL MTG. BRKT.
7	0508-00900-0000	T.V. BEZEL
8	A088-00015-0000	INTERLOCK SWITCH & BRKT. ASSY.
9	A082-91375-B000	GAME LOGIC BOARD ASSY.
	0624-00902-0100	P.C. SUPPORT BRKT. — 12" LG. (3 REQ'D.)
	0624-00902-0300	P.C. SUPPORT BRKT. — 2-1/2" LG.
	0624-00902-0500	P.C. SUPPORT BRKT. — 6-1/2" LG.
	0017-00101-0141	#8 x 11/16 UNSLOT. HEX HD. M.S. (13 REQ'D.)
	0017-00104-0037	#8 WASHER (13 REQ'D.)
	A084-91375-A595	PROGRAMMED MS. PAC-MAN BRD. ASSY.
10	A595-00020-0000	AUXILIARY BOARD & BRKT. ASSY.
	A084-91415-B617	AUXILIARY P.C. BOARD ASSY.
	0017-00042-0106	P.C. BRD. SUPPORT
	0595-00107-0000	AUX. P.C. MTG. BRKT.
11	A950-00004-0000	COIN BOX ASSY.
	A950-00006-0000	COIN BOX CRADLE ASSY.
	0950-00105-0000	COIN BOX COVER
	0950-00104-0000	COIN BOX HANDLE
	0950-00101-0000	COIN DEFLECTOR (2 REQ'D.)
	0950-00900-0000	LARGE PLASTIC CASH BOX
	0017-00101-0142	1/4-20 x 1-3/8 BLACK RND. HD. BOLT (4 REQ'D.)
	0017-00104-0014	7/8" DISH WASHER (4 REQ'D.)
	0017-00103-0018	1/4-20 HEX NUT (4 REQ'D.)
12	A961-00007-0000	CASTER ASSY. (2 REQ'D.)
	0961-00109-0000	WHEEL BRKT. (2 REQ'D.)
	0017-00042-0255	PLASTIC WHEEL (2 REQ'D.)
	0894-00702-00XF	SHAFT (2 REQ'D.)
	0017-00100-0037	3/8" E-RING (2 REQ'D.)
13	A866-00049-0000	LINE CORD ASSY.
		ADDITIONAL PARTS LIST
	A097-00008-0000	BACK DOOR LOCK ASSY.
	0017-00009-0490	5-5/8" SQR. VENT GRILLE — BACK DOOR (4 REQ'D.)
	A866-00036-0000	TEST SWITCH & BRKT. ASSY.
	A595-00014-0000	POWER CABLE ASSY.
	A595-00016-0000	LOW VOLTAGE CABLE ASSY.
	A595-00015-0000	MASTER CABLE ASSY.
	3000-17246-1000	GROUND STRAP
	A595-00013-0000	TRANSFORMER BOARD ASSY.
	A932-00026-0000	FILTER BOARD ASSY.
	A082-91109-A000	CREDIT MULTIPLIER BY-PASS P.C. BOARD ASSY.

NO. 602 — MS. PAC-MAN — MINI — FRONT

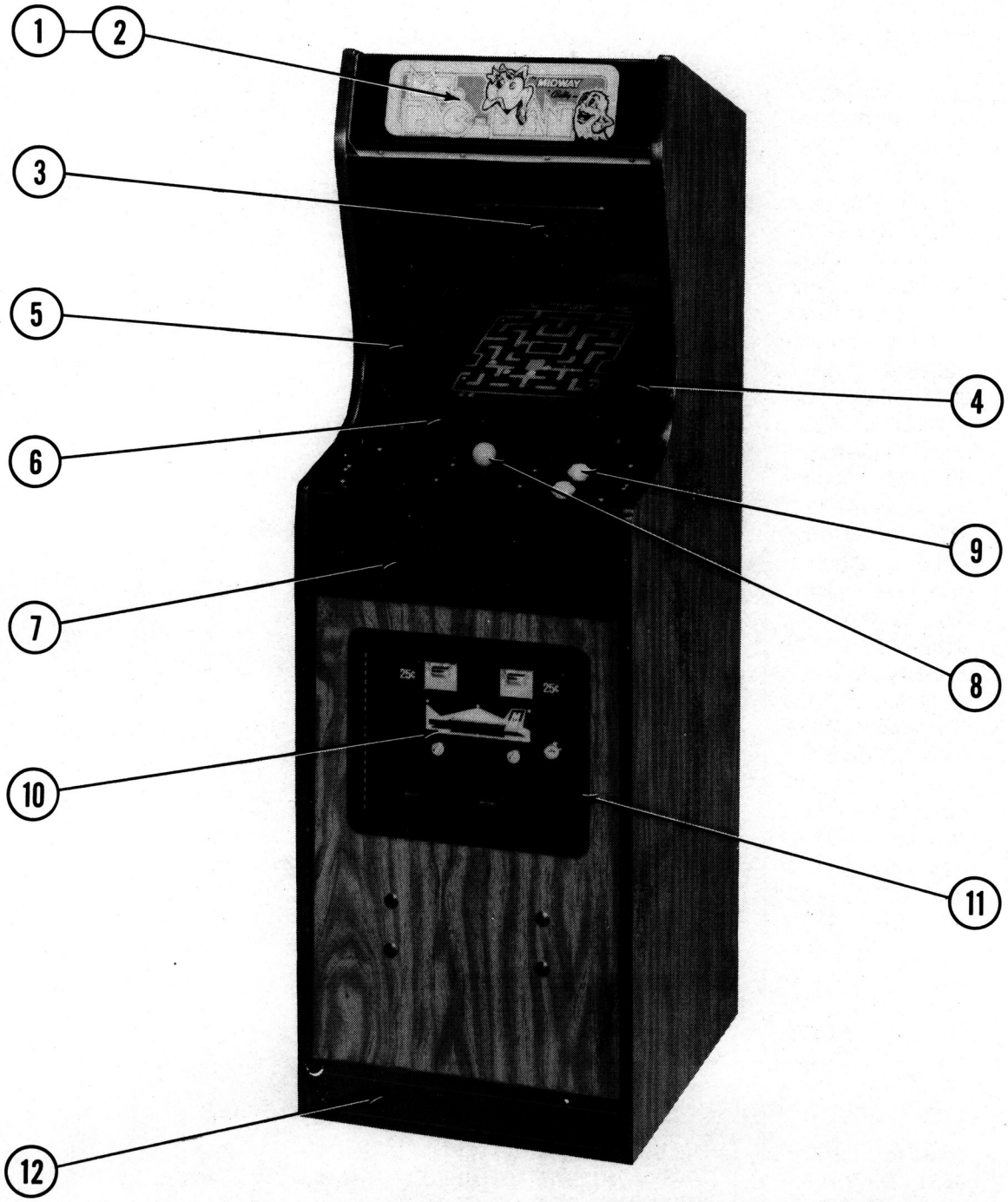

NO. 602 — MS. PAC-MAN — MINI — FRONT — PARTS LIST

*ORDER BY PART NUMBER **ONLY***

ITEM	PART NO.	DESCRIPTION
1	0602-00901-00XF	DISPLAY HEADER
	0017-00101-0138	#8 x 5/8 TORX TAMPER RESISTANT SCREW (8 REQ'D.)
	0017-00009-0522	LONG ARM KEY T-20 (FOR ABOVE SCREW)
2	A555-00007-0000	INSERT DISPLAY ASSY.
	0017-00031-0030	WEDGE BASE LIGHT SOCKET (5 REQ'D.)
	0017-00003-0219	#194 LAMP 14V., .27A. (5 REQ'D.)
	A514-00015-0000	INSERT DISPLAY CABLE ASSY.
3	0017-00009-0393	BLACK SPEAKER GRILLE W/SLOTS
	0017-00003-0259	6" x 9" SPEAKER 8 OHM, 7W.
	0017-00101-0127	#8-32 x 1-1/2 CARRIAGE BOLT (4 REQ'D.)
	0017-00103-0061	#8-32 HEX NUT W/SEMS (4 REQ'D.)
4	0602-00900-00XF	MAIN DISPLAY GLASS — 17-13/16" x 14-13/16" x 3/16"
5	0537-00903-0056	GLASS EDGE CHANNEL — 14-1/2" LG. (2 REQ'D.)
6	A555-00016-0000	GLASS CLAMPING PLATE ASSY.
	0017-00101-0138	#8 x 5/8 TORX TAMPER RESISTANT SCREW (2 REQ'D.)
7	0602-00100-00XF	CONTROL SHELF PLATE
	0602-00902-0000	DECORATIVE SHELF OVERLAY
	0017-00101-0620	#8-32 x 1/2 CARRIAGE BOLT (8 REQ'D.)
	0017-00103-0061	#8-32 HEX NUT W/SEMS (8 REQ'D.)
	0017-00101-0341	#6 x 1/4 PHIL. TRS. HD. SCREW (4 REQ'D.)
	0555-00101-0100	CONTROL SHELF MTG. BRKT. — RIGHT
	0555-00101-0200	CONTROL SHELF MTG. BRKT. — LEFT
	0555-00901-0000	LOCATING PINS (4 REQ'D.)
	0961-00115-00XF	STRIKE (2 REQ'D.)
	0017-00009-0033	LATCH CLAMP (2 REQ'D.)
	0017-00101-0141	#8 x 11/16 UNSLOT. HEX HD. M.S. (8 REQ'D.)
8	A595-00005-0000	CONTROL ASSY.
	A602-00010-0000	CONTROL SHELF CABLE ASSY.
9	0017-00042-0260	PUSH BUTTON ASSY. — WHITE (2 REQ'D.)
	0017-00032-0093	PUSH BUTTON SWITCH W/HOLDER (2 REQ'D.)
	0017-00103-0054	5/8-11 PAL NUT (2 REQ'D.)
10	A090-00300-07BK	U.S.A. DOUBLE COIN DOOR ASSY. — 25¢
	0090-00002-04BK	LARGE COIN DOOR FRAME
	0017-00101-0121	#6-32 x 5/16 PHIL. TRS. HD. SCR. (3 REQ'D.)
	A595-00019-0000	COIN DOOR CABLE ASSY.
11	0935-00906-0400	KICK PLATE — 17-15/16" LG.
12	0017-00102-0048	3/8-16 x 2" LEG LEVELERS (4 REQ'D.)
	0017-00103-0026	3/8-16 LEG LEVELER HEX NUTS (4 REQ'D.)

NO. 602 — MS. PAC-MAN — MINI — REAR ACCESS

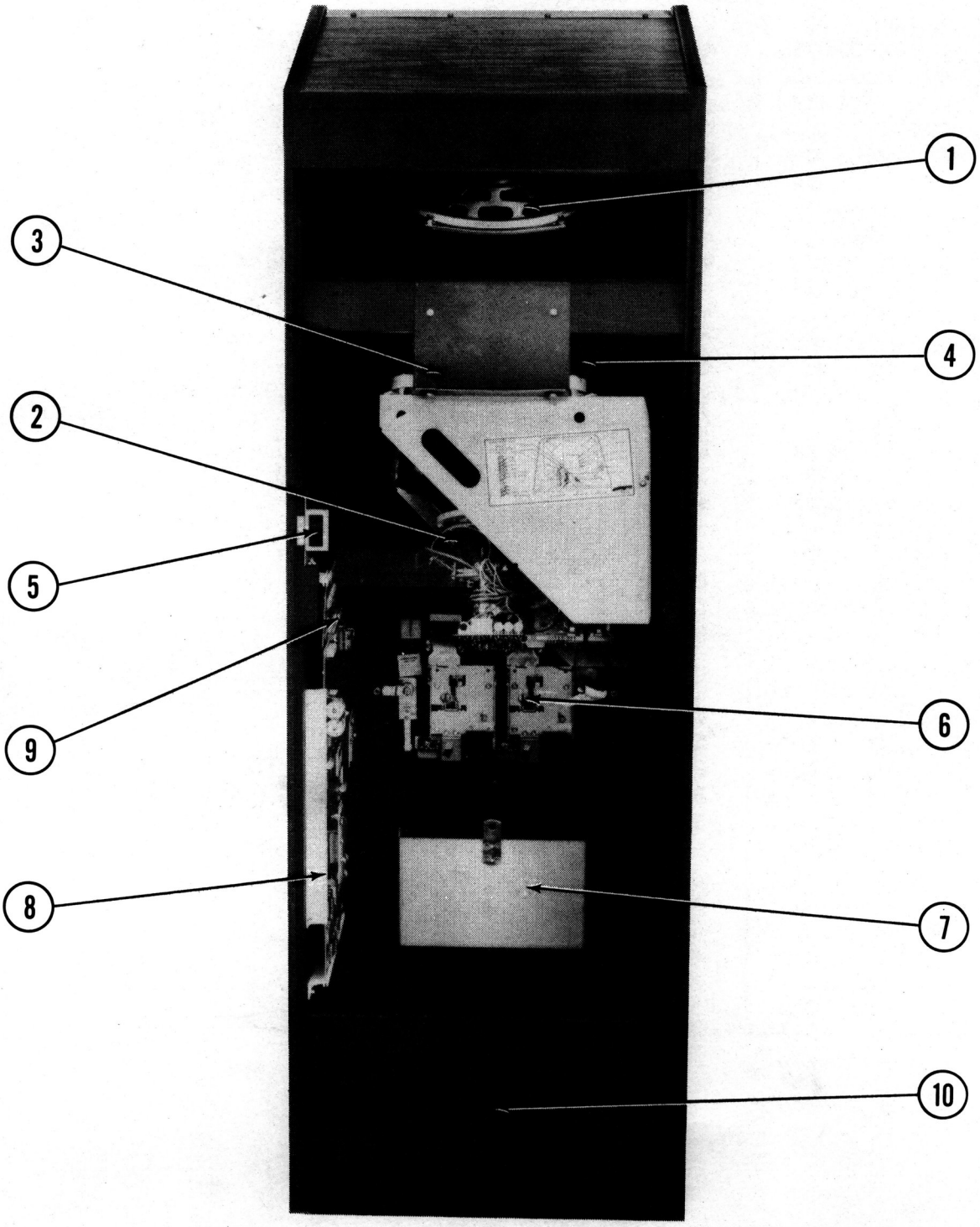

NO. 602 — MS. PAC-MAN — MINI — REAR ACCESS — PARTS LIST

*ORDER BY PART NUMBER **ONLY***

ITEM	PART NO.	DESCRIPTION
1	0017-00003-0259	6" x 9" SPEAKER 8 OHM, 7W.
2	0017-00003-0340	ELECTROHOME — 13" COLOR DUAL SYNC HORIZ. MTG. MONITOR (OR)
2	0017-00003-0369	WELLS-GARDNER — 13" COLOR DUAL SYNC HORIZ. MTG. MONITOR
3	A926-00012-00XF	T.V. MTG. BRKT. ASSY.
	0017-00102-0066	1/4-20 x 3/4 UNSLOT. HEX HD. BOLT (2 REQ'D.)
	0017-00104-0014	7/8" DISH WASHER (2 REQ'D.)
	0017-00103-0018	1/4-20 HEX NUT (2 REQ'D.)
	0513-00101-0000	MONITOR MTG. BRKT.
4	A514-00004-0000	T.V. BEZEL ASSY.
	0513-00900-0000	T.V. BEZEL
	0934-00905-0000	PLEXI-GLASS (TINTED)
	A961-00026-0000	BEZEL MTG. BRKT. ASSY.
5	A088-00015-0000	INTERLOCK SWITCH & BRKT. ASSY.
6	A090-00300-07BK	U.S.A. 25¢ COIN DOOR ASSY.
7	A950-00004-0000	COIN BOX ASSY.
	A950-00006-0000	COIN BOX CRADLE ASSY.
	0950-00105-0000	COIN BOX COVER
	0950-00104-0000	COIN BOX HANDLE
	0950-00900-0000	LARGE PLASTIC CASH BOX
	0017-00101-0142	1/4-20 x 1-3/8 BLACK RND. HD. BOLT (4 REQ'D.)
	0017-00104-0014	7/8" DISH WASHER (4 REQ'D.)
	0017-00103-0018	1/4-20 HEX NUT (4 REQ'D.)
8	A082-91375-B000	GAME LOGIC BOARD ASSY.
	0624-00902-0100	P.C. SUPPORT BRKT. — 12" LG. (2 REQ'D.)
	0624-00902-0300	P.C. SUPPORT BRKT. — 2-1/2" LG. (2 REQ'D.)
	0624-00902-0500	P.C. SUPPORT BRKT. — 6-1/2" LG.
	0017-00101-0141	#8 x 11/16 UNSLOT. HEX HD. M.S. (13 REQ'D.)
	0017-00104-0037	#8 FLAT WASHER (13 REQ'D.)
	A084-91375-A595	PROGRAMMED MS. PAC-MAN BOARD ASSY.
9	A595-00020-0000	AUXILIARY BOARD & BRKT. ASSY.
	A084-91415-B617	AUXILIARY P.C. BOARD ASSY.
	0017-00042-0106	P.C. BOARD SUPPORT
	0595-00107-0000	AUX. P.C. MTG. BRKT.
10	A088-00013-0000	ON-OFF SWITCH & BRKT. ASSY.
		ADDITIONAL PARTS LIST
	A097-00008-0000	BACK DOOR LOCK ASSY.
	0017-00009-0490	5-5/8" SQR. VENT GRILLE (4 REQ'D.)
	0926-00904-0000	PROTECTIVE BUBBLE — BACK DOOR
	0017-00101-0628	#8-32 x 3/4 CARRIAGE BOLT (10 REQ'D.)
	0017-00103-0061	#8-32 HEX NUT W/SEMS (10 REQ'D.)
	A602-00007-0000	HIGH VOLTAGE CABLE ASSY.
	A602-00008-0000	LOW VOLTAGE CABLE ASSY.
	A602-00009-0000	MASTER CABLE ASSY.
	A866-00049-0000	LINE CORD ASSY.
	3010-03003-0000	GROUNDING CLIP
	3000-17246-0800	GROUND STRAP
	A602-00006-0000	TRANSFORMER BOARD ASSY.
	A932-00026-0000	FILTER BOARD ASSY.
	A082-91109-A000	CREDIT MULTIPLIER BY-PASS P.C. BOARD ASSY.

NO. 599 — MS. PAC-MAN — COCKTAIL — FRONT

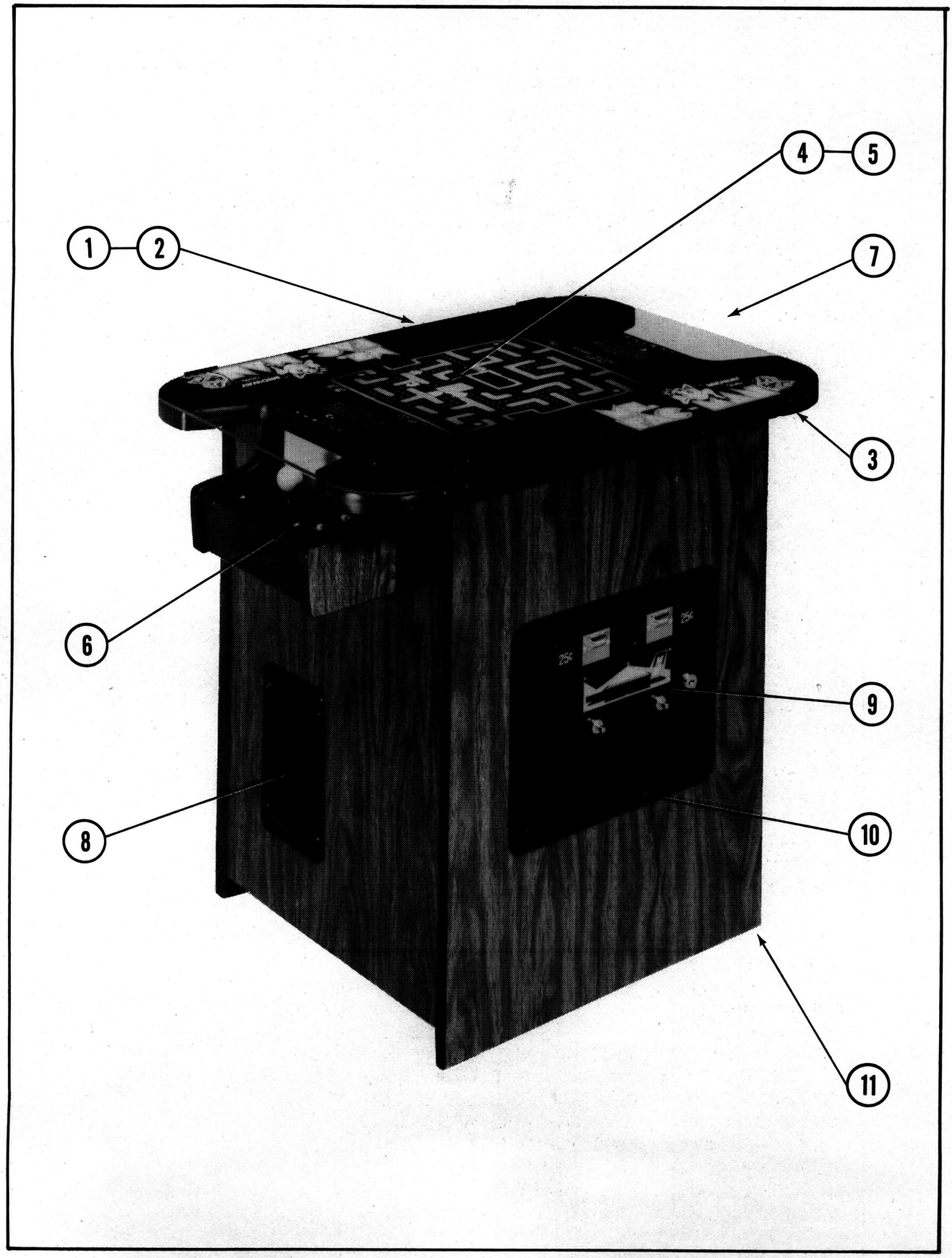

NO. 599 — MS. PAC-MAN — COCKTAIL — FRONT — PARTS LIST

*ORDER BY PART NUMBER **ONLY***

ITEM	PART NO.	DESCRIPTION
1	0017-00009-0499	COVER GLASS — 32" x 22" x 1/4"
2	0599-00901-0000	ARTWORK UNDERLAY
3	0775-00104-00XF	GLASS CLIPS (8 REQ'D.)
	0017-00101-0117	#8 x 5/8 PHIL. TRS. HD. SCREW (16 REQ'D.)
4	0508-00905-0000	T.V. PLEXI-GLASS (SMOKED) — 17-3/8" x 13-1/4" x 1/8"
	0508-00901-0000	PLEXI-GLASS CLIPS (4 REQ'D.)
	0017-00101-0017	#6 x 1/2 SLT. HEX HD. SCR. (4 REQ'D.)
5	0557-00900-0000	T.V. BEZEL
6	A599-00004-0100	CONTROL SHELF ASSY. — PLAYER #1
7	A599-00004-0200	CONTROL SHELF ASSY. — PLAYER #2
8	0017-00009-0393	BLACK SPEAKER GRILLE W/SLOTS (3 REQ'D.)
	0017-00003-0187	6" x 9" SPEAKER 8 OHM, 9W.
	0017-00101-0136	#8-32 x 1-1/4 CARRIAGE BOLT (12 REQ'D.)
	0017-00103-0061	#8-32 HEX NUT W/SEMS (12 REQ'D.)
9	A090-00300-07BK	U.S.A. COIN DOOR ASSY. — 25¢
10	0090-00002-04BK	LARGE COIN DOOR FRAME
	0017-00101-0121	#6-32 x 5/16 PHIL. TRS. HD. SCR. (3 REQ'D.)
	A595-00019-0000	COIN DOOR CABLE ASSY.
11	0017-00102-0048	3/8-16 x 2" LEG LEVELERS (4 REQ'D.)
	0017-00103-0026	3/8-16 LEG LEVELER HEX NUTS (4 REQ'D.)

NO. 599 — MS. PAC-MAN — COCKTAIL — INTERIOR ACCESS

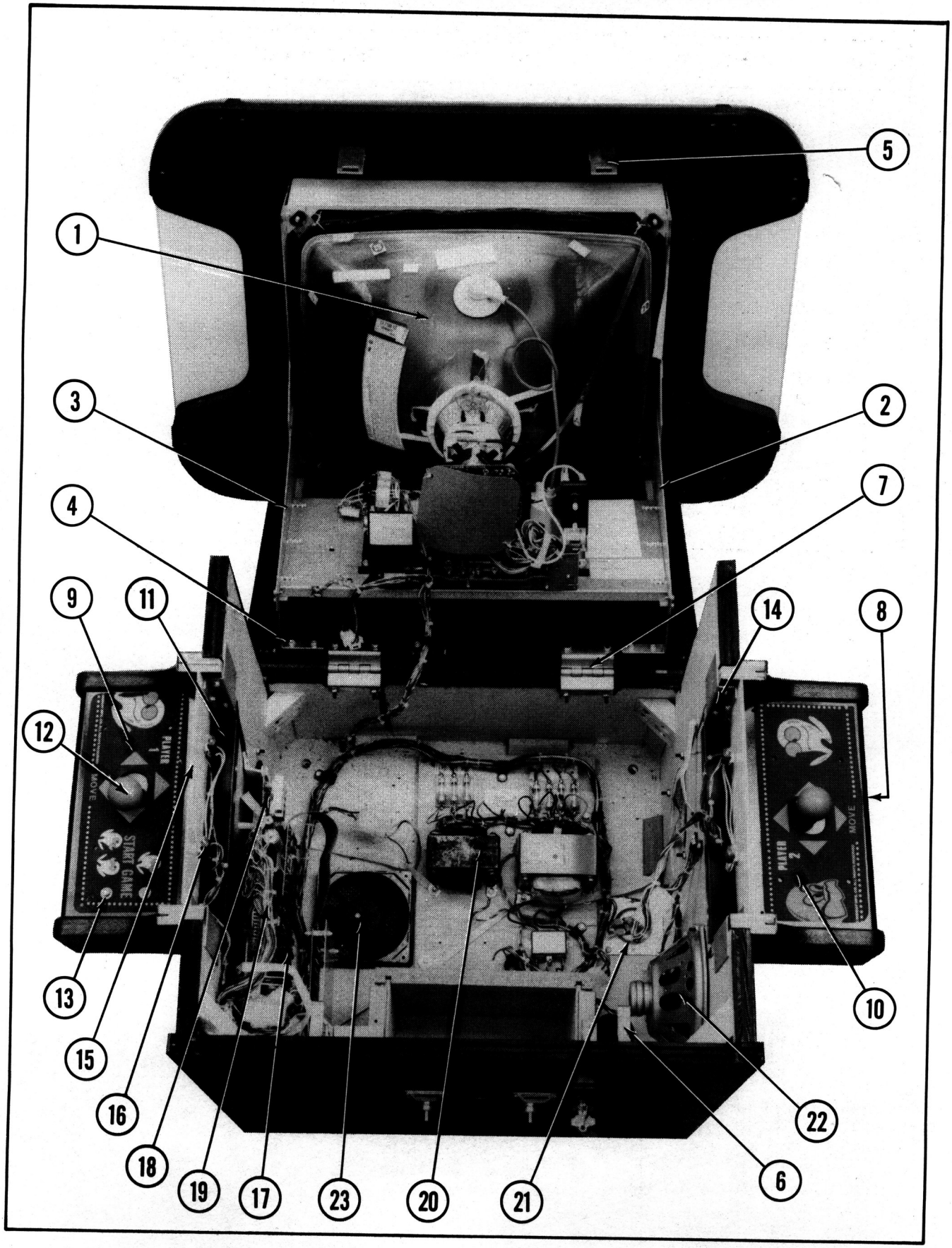

NO. 599 — MS. PAC-MAN — COCKTAIL — INTERIOR ACCESS — PARTS LIST

*ORDER BY PART NUMBER **ONLY***

ITEM	PART NO.	DESCRIPTION
1	0017-00003-0339	ELECTROHOME — 19" COLOR DUAL SYNC. HORIZ. MTG. MONITOR
2	A515-00017-01XF	MONITOR SUPPORT ASSY. — RIGHT
3	A515-00017-02XF	MONITOR SUPPORT ASSY. — LEFT
	0017-00101-0109	#8 x 5/16 UNSLOT. HEX HD. BOLT (6 REQ'D.)
4	0927-00101-00XF	SUPPORT ANGLE (2 REQ'D.)
	0017-00101-0598	#8-32 x 5/16 SLT. HEX HD. M.S. (8 REQ'D.)
5	0610-00132-00ZN	STRIKE (2 REQ'D.)
6	0017-00009-0033	LATCH CLAMP (2 REQ'D.) — NOT SEEN
	0017-00101-0141	#8 x 11/16 UNSLOT. HEX HD. M.S. (8 REQ'D.)
7	0017-00009-0514	2-1/2" HINGE (2 REQ'D.)
	0017-00101-0136	#8-32 x 1-1/4 CARRIAGE BOLT (4 REQ'D.)
	0017-00101-0628	#8-32 x 3/4 CARRIAGE BOLT (4 REQ'D.)
	0017-00103-0061	#8-32 HEX NUT W/SEMS (8 REQ'D.)
8	0599-00100-00XF	CONTROL PANEL (2 REQ'D.)
9	0599-00900-0100	DECORATIVE OVERLAY — PLAYER #1
10	0599-00900-0200	DECORATIVE OVERLAY — PLAYER #2
	0017-00101-0620	#8-32 x 1/2 CARRIAGE BOLT (8 REQ'D.)
	0017-00103-0061	#8-32 HEX NUT W/SEMS (8 REQ'D.)
	0017-00101-0341	#6 x 1/4 PHIL. TRS. HD. SCR. (14 REQ'D.)
11	0510-00101-00XF	BOTTOM PAN (2 REQ'D.)
12	A595-00005-0000	CONTROL ASSY. (2 REQ'D.)
	A599-00006-0100	CONTROL SHELF CABLE ASSY. — PLAYER #1
	A599-00006-0200	CONTROL SHELF CABLE ASSY. — PLAYER #2
13	0017-00032-0051	SMALL RED BUTTON SWITCH W/HARDWARE (2 REQ'D.)
14	0930-00104-0000	CONTROL PANEL LOCATING BRKT. (4 REQ'D.)
	0017-00101-0025	#8 x 1/2 SLT. HEX HD. M.S. (12 REQ'D.)
15	0930-00904-0000	LIGHT SHIELD (2 REQ'D.)
16	0017-00031-0044	WEDGE BASE LAMP SOCKET (4 REQ'D.)
	0017-00003-0219	#194 LAMP 14V., .27A. (4 REQ'D.)
	0017-00101-0555	#6-32 x 5/16 SLT. HEX HD. M.S. (4 REQ'D.)
17	A082-91375-B000	GAME LOGIC BOARD ASSY.
	0624-00902-0100	P.C. SUPPORT BRKT. — 12" LG.
	0624-00902-0300	P.C. SUPPORT BRKT. — 2-1/2" LG. (3 REQ'D.)
	0017-00101-0141	#8 x 11/16 UNSLOT. HEX HD. M.S. (13 REQ'D.)
	0017-00104-0031	#8 WASHER (13 REQ'D.)
18	A932-00026-0000	FILTER BOARD ASSY.
19	A595-00020-0000	AUXILIARY BOARD & BRKT. ASSY.
	A084-91415-B617	AUXILIARY P.C. BOARD ASSY.
	0017-00042-0106	P.C. BOARD SUPPORT
	0595-00107-0000	AUX. P.C. MTG. BRKT.
	A084-91375-A595	PROGRAMMED MS. PAC-MAN BOARD ASSY. (ITEMS 17 THRU 19)
20	A599-00008-0000	TRANSFORMER BOARD ASSY.
21	A088-00013-0000	ON-OFF SWITCH & BRKT. ASSY.
22	0017-00003-0187	6" x 9" SPEAKER 8 OHM, 9W.

NO. 599 — MS. PAC-MAN — COCKTAIL — INTERIOR ACCESS — PARTS LIST (Continued)

*ORDER BY PART NUMBER **ONLY***

ITEM	PART NO.	DESCRIPTION
23	A775-00013-0000	FAN ASSY.
	0151-00081-0000	4" FAN
	0775-00110-00XF	FAN PLATE
	0749-00106-00XF	VENT SCREEN
	0017-00101-0347	#6-32 x 1/2 R.H.M.S. (4 REQ'D.)
	0017-00104-0009	#6 EXT. WASHER (4 REQ'D.)
	0017-00103-0005	#6-32 HEX NUT (4 REQ'D.)
	0017-00101-0026	#8 x 5/8 SLT. HEX HD. M.S. (4 REQ'D.)
		ADDITIONAL PARTS LIST
	A082-91109-A000	CREDIT MULTIPLIER BY-PASS P.C. BOARD ASSY.
	A927-00019-0000	COIN BOX ASSY.
	A962-00004-0000	COIN BOX COVER ASSY.
	A962-00005-0000	COIN BOX SIDE CHANNEL ASSY. — SHORT
	0962-00101-0000	COIN BOX SIDE CHANNEL — SHORT
	0017-00101-0628	#8-32 x 3/4 CARRIAGE BOLT (4 REQ'D.)
	0017-00104-0022	#8 WASHER (4 REQ'D.)
	0017-00103-0061	#8-32 HEX NUT W/SEMS (4 REQ'D.)
	A088-00014-0000	INTERLOCK SWITCH & BRKT. ASSY.
	A866-00036-0000	TEST SWITCH & BRKT. ASSY.
	0927-00907-0000	HIGH VOLTAGE SHIELD — FORMED
	3000-17246-1200	GROUND STRAP
	A599-00012-0000	MASTER CABLE ASSY.
	A599-00009-0000	POWER CABLE ASSY.
	A599-00010-0000	LOW VOLTAGE CABLE ASSY.
	A599-00011-0000	A.C. ADAPTOR CABLE ASSY.
	A866-00049-0000	LINE CORD ASSY.
	0927-00005-0000	HIGH BASE LEG KIT ASSY. — OPTIONAL

MS. PAC-MAN — TRANSFORMER BOARD ASSY.

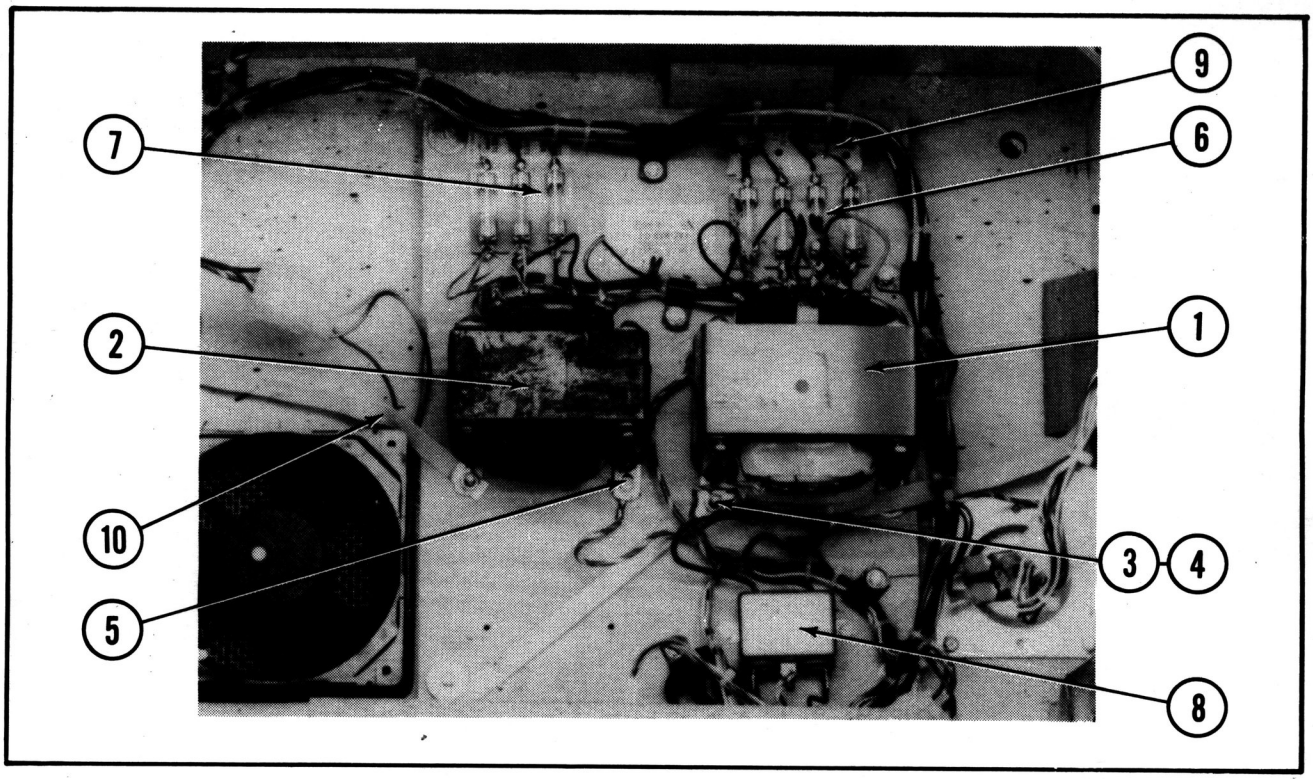

MS. PAC-MAN — TRANSFORMER BOARD ASSY. — PARTS LIST

*ORDER BY PART NUMBER **ONLY***

ITEM	PART NO.	DESCRIPTION
1	MT00-00080-0000	TRANSFORMER — 115V. — UPRIGHT & MINI
2	MT00-00082-0000	TRANSFORMER — 115/115V. — UPRIGHT & MINI
1	MT00-00084-0000	TRANSFORMER — 240V., 50 HZ — COCKTAIL ONLY
2	MT00-00085-0000	TRANSFORMER — 115V., 50 HZ — COCKTAIL ONLY
3	0017-00101-0637	#8-32 x 1" CARRIAGE BOLT (4 REQ'D.)
4	0017-00103-0008	#8-32 HEX NUT (4 REQ'D.)
5	0017-00101-0014	#6 x 1/2 SLT. HEX HD. SCREW (13 REQ'D.)
6	0720-00001-0400	4 POSITION FUSE CLIP ASSY.
7	0720-00001-0300	3 POSITION FUSE CLIP ASSY. — COCKTAIL ONLY
7	0720-00001-0200	2 POSITION FUSE CLIP ASSY. — UPRIGHT & MINI
	0017-00003-0001	FUSE 1A., 250V. (2 REQ'D. — UPRIGHT & COCKTAIL, 1 REQ'D. — MINI)
	0017-00003-0004	SLO-BLO FUSE 2A., 250V. (1 REQ'D. — UPRIGHT, 2 REQ'D. — COCKTAIL, 3 REQ'D. — MINI)
	0017-00003-0169	FUSE 5A., (2 REQ'D.)
	0017-00003-0261	SLO-BLO FUSE 1-1/2 A., 250V. (1 REQ'D. — UPRIGHT & COCKTAIL)
	0866-00906-0000	FUSE SHIELD — NOT SHOWN
8	0017-00003-0114	NOISE FILTER
9	A031-00002-0000	TERMINAL STRIP ASSY.
10	3000-17246-0900	GROUND STRAP — UPRIGHT
10	3000-17246-1000	GROUND STRAP — MINI
10	3000-17246-0300	GROUND STRAP — COCKTAIL

FRONT DOOR ASSEMBLY — U.S.A. 25¢

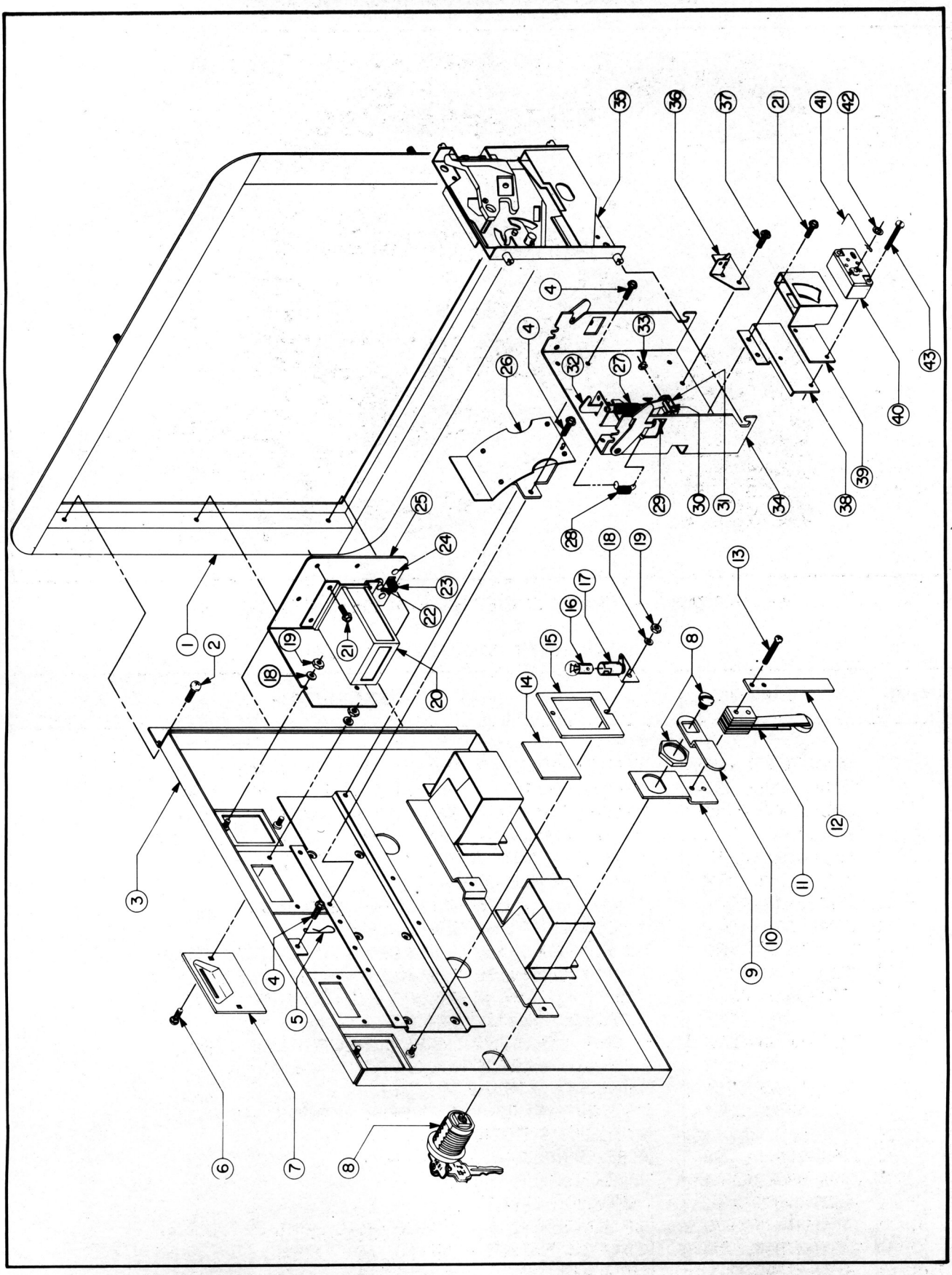

FRONT DOOR ASSEMBLY — U.S.A. 25¢

*ORDER BY PART NUMBER **ONLY***

ITEM	PART NO.	DESCRIPTION
1	0090-00002-02BK	DOUBLE ENTRY COIN DOOR FRAME
2	0017-00101-0121	#6-32 x 5/16 PHIL. TRS. HD. SCR. (3 REQ'D.)
3	A090-00073-02BK	DOUBLE ENTRY COIN DOOR W/DRESS PLATE
4	0017-00101-0123	#8 x 1/4 UNSLOT. HEX HD. SCREW (4 REQ'D.)
5	0017-00007-0019	KEY HOOK
6	0017-00101-0552	#6-32 x 1/4 CARRIAGE BOLT (4 REQ'D.)
7	0090-00117-03XF	COIN ENTRY PLATE — 25¢ (2 REQ'D.)
8	A097-00005-0000	DOOR LOCK & KEY W/SCREW & NUT (OR)
8	A097-00006-0000	DOOR LOCK & KEY W/SCREW & NUT
9	0090-00128-00XF	DOOR TILT SWITCH BRKT.
10	0017-00005-0041	DOOR CAM
11	A090-00095-0000	DOOR TILT SWITCH
12	0090-00126-01XF	SWITCH BACK-UP PLATE
13	0017-00101-0525	#5-40 x 9/16" PHIL. HD. M.S. (2 REQ'D.)
	A090-00096-0000	DOOR TILT SWITCH & BRKT. ASSY. (ITEMS 9 & 11 THRU 13)
14	0090-00903-9500	25¢ WINDOW (2 REQ'D.)
15	0090-00143-00XF	COIN PLEX RETAINER
16	0017-00003-0219	12 VOLT LAMP — G.E. #1895 (2 REQ'D.)
17	0017-00031-0048	BAYONET SOCKET W/BRKT. (2 REQ'D.)
18	0017-00104-0002	#6 SPLIT LOCK WASHER (8 REQ'D.)
19	0017-00103-0084	#6-32 HEX NUT W/SEMS (4 REQ'D.)
20	A090-00057-0000	COIN METER
21	0017-00101-0124	#6 x 1/4 UNSLOT. HEX HD. SCR. (8 REQ'D.)
22	0017-00032-0051	PUSH BUTTON SWITCH
23	0017-00032-0007	SLIDE SWITCH
24	0017-00072-0034	STEEL OVAL HD. RIVET
25	0090-00173-0000	COIN COUNTER MTG. BRKT.
	A090-00082-0000	TEST SWITCH & BRKT. ASSY. (ITEMS 23 THRU 25)
26	A090-00087-0000	COIN CHUTE & TOP ASSY. (2 REQ'D.)
27	0010-00134-0000	SPRING
28	0010-00181-0000	SPRING
29	0017-00007-0083	1/8 x 1-5/8 ROLL PIN
30	0090-00129-00XF	PIVOT POST
31	0090-00167-00XF	PIVOT LEVER
32	0093-00155-00XF	REJECT LEVER
33	0017-00100-0018	E-RING
	A090-00088-0000	REJECT LEVER ASSY. (2 REQ'D.) (ITEMS 30 THRU 33)
34	A090-00085-0000	COIN ACCEPTOR FRAME ASSY. (2 REQ'D.)
35	0017-00005-0003	COIN ACCEPTOR W/STRING CUTTER (2 REQ'D.) (OR)
35	0017-00005-0211	COIN ACCEPTOR W/ANTI STRING DEVICE (2 REQ'D.) (OR)
35	0017-00005-0214	COIN ACCEPTOR W/STRING CUTTER (2 REQ'D.)
36	A090-00064-0000	ANTI-PENNY DEVICE
37	0017-00101-0099	#6 x 1/4 SLT. HEX HD. M.S. (2 REQ'D.)
38	0090-00162-00XF	COIN SWITCH MTG. BRKT.
39	0017-00005-0203	COIN SWITCH CHUTE
40	0017-00005-0195	COIN SWITCH
41	0010-00599-0000	COIN SWITCH WIRE
42	0017-00007-0132	PUSH-ON RING
	A090-00059-0400	COIN SWITCH & WIRE ASSY. (ITEMS 40 THRU 42)
43	0017-00101-0698	#4-40 x 3/4 SLT. RND. HD. M.S. (2 REQ'D.)
	A090-00077-0000	COIN GUIDE & SWITCH ASSY. (ITEMS 38 THRU 43)

MS. PAC-MAN — CONTROL ASSEMBLY — ALL VERSIONS

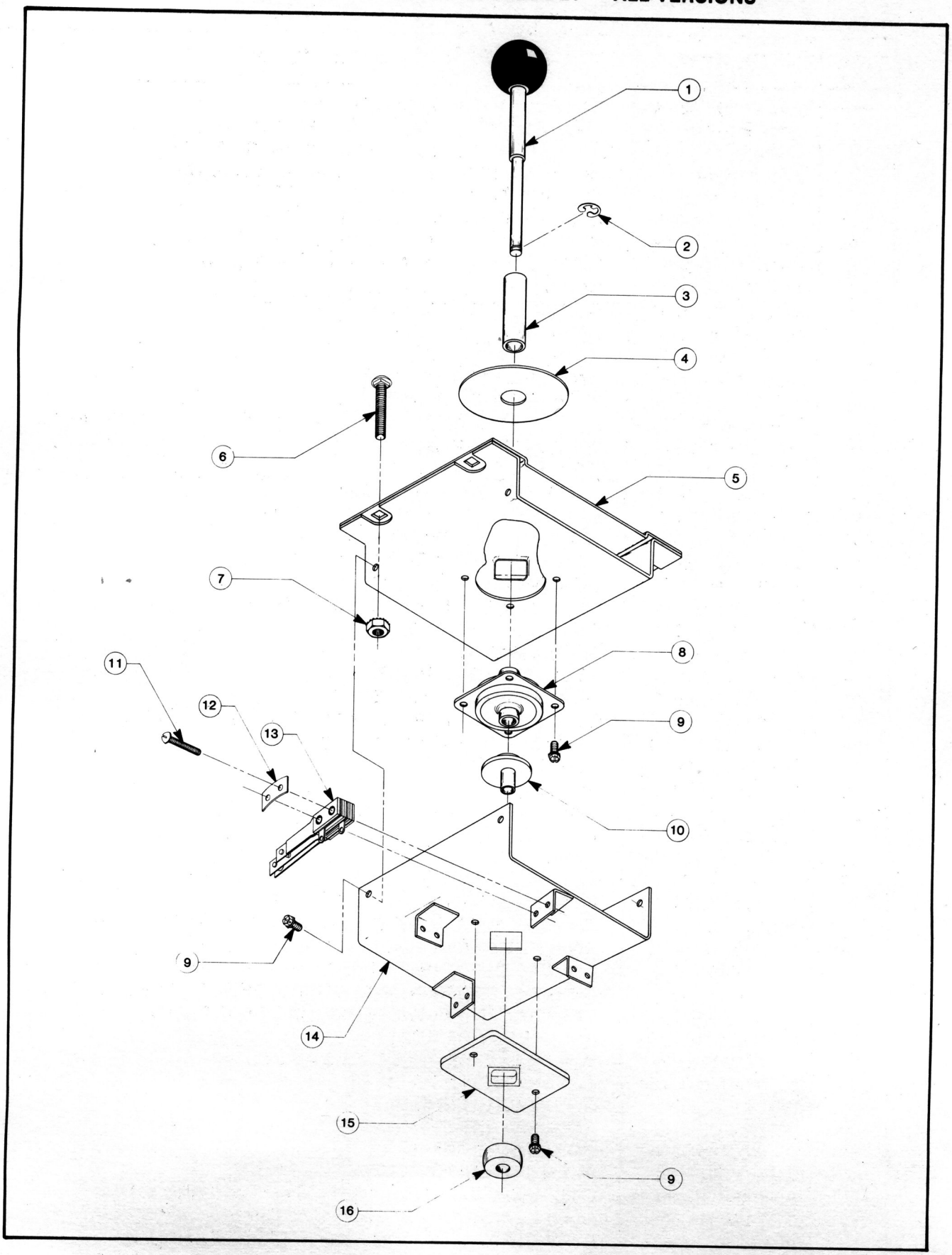

MS. PAC-MAN — CONTROL ASSEMBLY — ALL VERSIONS — PARTS LIST

*ORDER BY PART NUMBER **ONLY***

ITEM	PART NO.	DESCRIPTION
1	A932-00022-0000	BALL & SHAFT ASSEMBLY
2	0017-00100-0025	1/4 E-RING
3	0921-00702-0000	STOP SPACER
4	0921-00902-0000	SLIDE PLATE
5	A595-00006-0000	PIVOT PLATE WELD ASSEMBLY
6	0017-00101-0637	#8-32 x 1" CARRIAGE BOLT (4 REQ'D.)
7	0017-00103-0061	#8-32 HEX NUT W/SEMS (4 REQ'D.)
8	0932-00902-0000	GROMMET
9	0017-00101-0598	#8-32 x 5/16 SLT. HEX HD. M.S. (10 REQ'D.)
10	0962-00904-0000	SLEEVE
11	0017-00101-0527	#5-40 x 5/8 SLT. RND. HD. SCR. (8 REQ'D.)
12	0020-00202-0000	SWITCH PLATE (4 REQ'D.)
13	A932-00009-0000	SWITCH ASSEMBLY (4 REQ'D)
14	A932-00012-00XF	STOP PLATE & SWITCH BRKT. ASSY.
15	0932-00905-0000	WEAR PLATE
16	0921-00700-0000	ACTUATOR

V Technical Troubleshooting

Troubleshooting

Introduction

The most common problems occur in harness components such as the coin acceptor, player controls, interconnecting wiring, etc. The TV monitor and PCB computer cause their share of problems too, but not as much as the harness and its component parts. TV monitor troubleshooting will not be covered here because it is covered in that section of this manual.

As you already know, the PCB computer is a complex device with a number of different circuits. Some circuits remain basically the same among games, but overall there are a great many differences between them. PCB troubleshooting procedures, therefore, can be lengthy and will differ greatly among games. However, some basic Z-80 CPU information is involved in this section.

General Suggestions

The first step in any troubleshooting procedure is correctly identifying the malfunction's symptoms. This includes not only the circuits or features malfunctioning, but also those still operational. A carefully trained eye will pick up other clues as well. For instance, a game in which the computer functions fail completely just after money was collected may have a quarter shorting the PCB traces. Often, an experienced troubleshooter will be able to spot the cause of the problem even before opening the cabinet.

After all the clues are carefully considered, the possible malfunctioning areas can be narrowed down to one or two good suspects. Those areas can be examined by a process of elimination until the cause of the malfunction is discovered.

Harness Component Troubleshooting

Typical problems falling in this category are coin and credit problems, power problems and failure of individual features.

NO GAME CREDIT

For example, your prospective player inserts his quarter and is not awarded a game. The first item to check is if the quarter is returned. If the quarter is returned, the malfunction most certainly lies in the coin acceptor itself. First, use a set of test coins (both old and new) to ascertain that the player's coin is not undersize or underweight. If your test coins are also returned, coin acceptor servicing is indicated. Generally, the cause of this particular problem is a maladjusted magnet gate. Normally, this will mean slightly closing the magnet gate a little by turning the adjusting screw out a bit (see section on coin acceptor for more details).

If the quarter is not returned and there is no game credit, the cause of the malfunction may be in one of several areas. First try operating the coin return button; if the coin is returned, the problem is most likely in the magnet gate. Enlarge the gap according to the coin acceptor service procedures. If this does not cure the problem, remove the coin acceptor, clean it and perform the major adjustment procedure.

If the trapped coin is not returned when the wiper lever is actuated, you may have an acceptor jammed by a slug, gummed up with beer, a jammed coin chute, or mechanical failure of the acceptor mechanism. In this case, first check for the slug that will generally be trapped against the magnet. If so, simply remove the slug and test the acceptor. If the chute is blocked, remove the acceptor and remove the jammed coins. If there is actual failure of the acceptor, remove the unit and repair as indicated in the coin acceptor service procedures.

If the coin is making its way through the acceptor (that is, falling into the coin box), yet there is still no game credit, you either have a mechanical failure of the coin switch or electrical failure of the coin and credit circuits. The first place to begin is by checking the coin switch. Most of these switches are the make/break variety of micro switch, which is checked by testing for continuity between the NO, NC, and C terminals. When not actuated, the NC and C terminals should be continuous and the NO terminal open. When operated, the NO and C terminals should close and the NC should be open. If the coin switch checks out, examine the connections to the terminals to make sure there is good contact. If necessary, use the continuity tester and check from the terminal lug on the switch to the associated PCB trace. This will tell you if there is a continuous line all the way to the credit circuit.

If the coin switch wires do not check out, the problem is in the computer — most likely in the coin and credit circuitry.

If you do get game credit when a coin is deposited, but the game will not start when the start switch is pressed, you may have a problem in the start switch, the interconnecting wiring or in the computer. First check the switch. If the switch is OK, proceed to check the wiring. Again, make sure you go from the terminal lug on the switch to the PCB trace. This way, you will check the terminal contact as well as PCB edge connector contact. If the wiring is continuous, proceed to check the PCB credit circuit. If not, check each section of the wiring, until the discontinuity is located. If the wiring is OK, the problem must lie in the computer.

Transformer and Line Voltage Problems

Your machine must have the correct line voltage to operate properly. If the line voltage drops too low, a circuit in the computer will disable game credit. The point at which the computer will fail to work will vary some from game to game, but no game will work on line voltage that drops below 105 VAC.

Low line voltage may have many causes. Line voltage normally fluctuates a certain amount during the day as the total usage varies. Peak usage times occur mainly at dawn or dusk, so if your machine's malfunction seems to be related to the time of day, this may be a factor. A large load connected to the same line as the game (such as a large air conditioner or other device with an exceptionally large motor) may drop the line voltage significantly when starting up. This drop can result in an intermittent credit problem. In addition, poor connections in the location wiring, plug, or line cord may also cause a significant drop in power. Cold solder joints in the game's harness, especially in areas like the transformer connections, interlock switch, or fuse block, may also produce the same results, although probably on a more permanent basis.

Sometimes location owners (especially in bars) replace light switches with dimmer rheostats, and the game is sometimes on the same line. Obviously, the voltage available to the game is going to drop dramatically when the dimmer is turned.

In any case, the way to check for correct line voltage is with your VOM. Set the VOM to 250 VAC and stick the probes in the wall receptacle. If it's OK here, check the transformer primary connections. If you do not get 117 VAC, examine the solder joints on the transformer, fuse block, and interlock switch. If you do get 117 VAC, the problem must be either in the transformer, harness connections, or in the PCB power supply.

If you suspect the transformer, check its secondaries with the VOM set to 50 VAC and correlate the readings with the legend on the side of the transformer. The transformer must also be correctly grounded, so check the ground potential as well, especially if there is a hum bar rolling up or down the TV screen.

HARNESS PROBLEMS

Other harness problems include blowing fuses and malfunctioning controls. The repeating blown-fuse problem can sometimes be quite exasperating to solve, for short circuits have the tendency to occur in areas almost impossible to find. First, try inserting a new fuse, as old fuses age and blow without cause. If the new one also blows, you definitely have a short.

The best way to approach this problem is by turning the power off and disconnecting devices that may be causing the problem, such as the TV, transformer, and PCB. Disconnect the devices by pulling off their connectors, but do not allow them to touch. If necessary, insulate them with small pieces of electrical tape. Then, connect your VOM across the terminals of the fuse block (all electrical power shut off), and set it to one of the resistance scales. This will save blowing a fuse each time you want to check the circuit.

If the VOM reveals that disconnecting the devices removed the short, reconnect the devices one by one until the short returns. The last device connected is the one that is at fault. If the VOM reads a short even after the devices are disconnected, the fault must lie in the harness itself, and only patient exploration will reveal its location. First, carefully examine all the wiring, looking for terminals that may be touching, metal objects such as coins shorting connections or burned insulation. If necessary, use the VOM to check each suspected wire.

MALFUNCTIONING CONTROLS

One of the most common problems here is a bad potentiometer. Typically, a bad pot will cause the image to jump as it reaches a certain point. The only cure for this one is to install a new pot.

If a feature that is operated by a switch (for example, joysticks, foot pedals, control panel buttons) does not operate at all, check the switch with a VOM or continuity tester to verify its operation. If the switch does not check out, replace it. If the switch is OK, you should suspect the input to the switch from the PCB. In this case, get out the harness and logic schematics and check to see what kind of input it is. In many cases, the input will be +5 VDC. If so, use the VOM to check its presence. Normally, the switch is used to pull a +5 VDC line LOW to GND or to pull a LOW line HIGH. If the PCB output is missing, check the wire length from the PCB. If you find the signal at the PCB trace, the wire length or connection is at fault. If not, begin exploring the PCB using the logic schematics.

A Glossary of Microprocessor Terms

MICROPROCESSOR — one or several microcircuits that perform the function of a computer's CPU. Sections of the circuit have arithmetic and comparative functions that perform computations and executive instructions.

CPU — central-processing unit. A computing system's "brain", whose arithmetic, control and logic elements direct functions and perform computations. The microprocessor section of a microcomputer is on one chip or several chips.

PROM — programmable read-only memory. User permanently sets binary on-off bits in each cell by selectively fusing or not fusing electrical links. Nonerasable. Used for low-volume applications.

EPROM — erasable, programmable, read-only memory. Can be erased by ultraviolet light bath, then reprogrammed. Frequently used during design and development to get programs debugged, then replaced by ROM for mass production.

ROM — read-only memory. The program, or binary on-off bit pattern, is set into ROM during manufacture, usually as part of the last metal layer put onto the chip. Nonerasable. Typical ROM's contain up to 16,000 bits of data to serve as the microprocessor's basic instructions.

RAM — random-access memory. Stores binary bits as electrical charges in transistor memory cells. Can be read or modified through the CPU. Stores input instructions and results. Erased when power is turned off.

LSI — large scale integration. Formation of hundreds or thousands of so-called gate circuits on semiconductor chips. Very large scale integration (VLS) involves microcircuits with the greatest component density.

MOS — metal-oxide semiconductor. A layered construction technique for integrated circuits that achieves high component densities. Variations in MOS chip structures create circuits with speed and low-power requirements, or other advantages (static will damage a MOS chip).

Introduction to the Z-80 CPU

The term "microcomputer" has been used to describe virtually every type of small computing device designed within the last few years. This term has been applied to everything from simple "microprogrammed" controllers constructed out of TTL MSI up to low end minicomputers with a portion of the CPU constructed out of TTL LSI "bit slices." However, the major impact of the LSI technology within the last few years has been with MOS LSI. With this technology, it is possible to fabricate complete and very powerful computer systems with only a few MOS LSI components.

The Zilog Z-80 family of components can be configured with any type of standard semiconductor memory to generate computer systems with an extremely wide range of capabilities. For example, as few as two LSI circuits and three standard TTL MSI packages can be combined to form a simple controller. With additional memory and I/O devices a computer can be constructed with capabilities that only a minicomputer could previously deliver.

New products using the MOS LSI microcomputer are being developed at an extraordinary rate. The Zilog Z-80 component set has been designed to fit into this market through the following factors:

1. The Z-80 is fully software compatible with the popular 8080A CPU.
2. Existing designs can be easily converted to include the Z-80.
3. The Z-80 component set is at present superior in both software and hardware capabilities to any other microcomputer system on the market today.
4. For increased throughput the Z80A operating at a 4 MHZ clock rate offers the user significant speed advantages.

Microcomputer systems are extremely simple to construct using Z-80 components. Any such system consists of three parts:

1. **CPU (Central Processing Unit)**
2. **Memory**
3. **Interface Circuits to peripheral devices**

The CPU is the heart of the system. Its function is to obtain instructions from the memory and perform the desired operations. The memory is used to contain instructions and in most cases data that is to be processed. For example, a typical instruction sequence may be to read data from a specific peripheral device, store it in a location in memory, check the parity and write it out to another peripheral device. Note that the Zilog component set includes the CPU and various general purpose I/O device controllers, while a wide range of memory devices may be used from any source. Thus, all required components can be connected together in a very simple manner with virtually no other external logic.

General Purpose Registers

There are two matched sets of general purpose registers, each set containing six 8-bit registers that may be used individually as 8-bit registers or as 16-bit register pairs by the programmer. One set is called BC, DE and HL while the complementary set is called BC', DE' and HL'. At any one time the programmer can select either set of registers to work with through a single exchange command for the entire set. In systems where fast interrupt response is required, one set of general purpose registers and an accumulator/flag register may be reserved for handling this very fast routine. Only a simple exchange command need be executed to go between the routines. This greatly reduces interrupt service time by eliminating the requirement for saving and retrieving register contents in the external stack during interrupt or subroutine processing. These general purpose registers are used for a wide range of applications by the programmer. They also simplify programming, especially in ROM based systems where little external read/write memory is available.

Arithmetic & Logic Unit (ALU)

The 8-bit arithmetic and logical instructions of the CPU are executed in the ALU. Internally the ALU communicates with the registers and the external data bus on the internal data bus. The type of functions performed by the ALU include:

Add	Left or right shifts or rotates (arithmetic and logical)
Subtract	Increment
Logical AND	Decrement
Logical OR	Set bit
Logical Exlusive OR	Reset bit
Compare	Test bit

Instruction Register and CPU Control

As each instruction is fetched from memory, it is placed in the instruction register and decoded. The control sections performs this function and then generates and supplies all of the control signals necessary to read or write data from or to the registers, control the ALU and provide all required external control signals.

Z-80 CPU Pin Description

The Z-80 CPU is packaged in an industry standard 40 pin Dual In-Line Package. The I/O pins are shown in the below figure and the function of each is described.

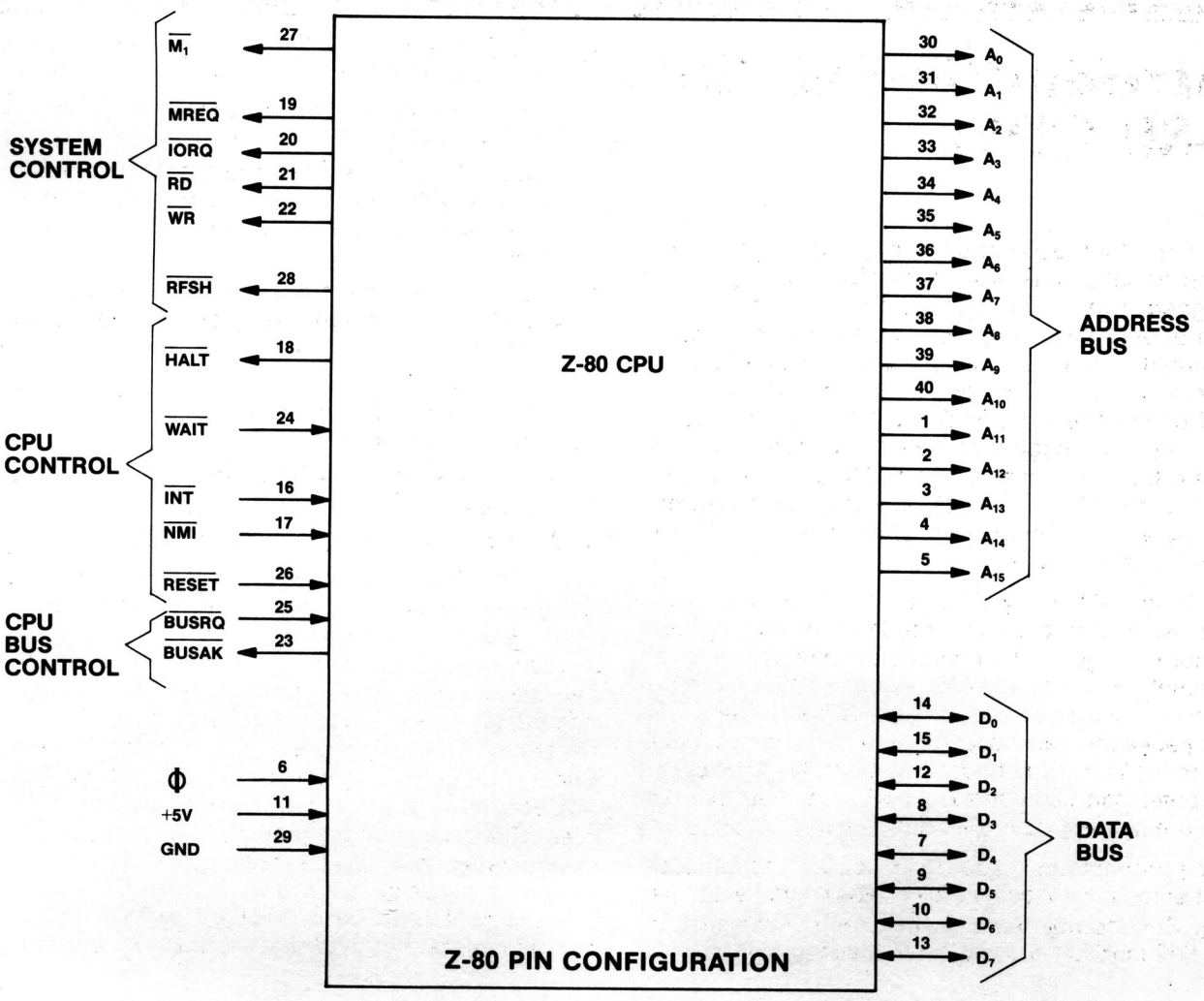

A_0-A_{15}
(Address Bus)
Tri-state output, active high. A_0-A_{15} constitute a 16-bit address bus. The address bus provides the address for memory (up to 64K bytes) data exchanges and for I/O device data exchanges. I/O addressing uses the 8 lower address bits to allow the user to directly select up to 256 input or 256 output ports. A_0 is the least significant address bit. During refresh time, the lower 7 bits contain a valid refresh address.

D_0-D_7
(Data Bus)
Tri-state input/output, active high. D_0-D_7 constitute an 8-bit bidirectional data bus. The data bus is used for data exchanges with memory and I/O devices.

M_1
(Machine Cycle one)
Output, active low. $\overline{M_1}$ indicates that the current machine cycle is the OP code fetch cycle of an instruction execution. Note that during execution of 2-byte op-codes, $\overline{M1}$ is generated as each op code byte is fetched. These two byte op-codes always begin with CBH, DDH, EDH or FDH. $\overline{M1}$ also occurs with $\overline{IORQ}$ to indicate an interrupt acknowledge cycle.

MREQ
(Memory Request)
Tri-state output, active low. The memory request signal indicates that the address bus holds a valid address for a memory read or memory write operation.

IORQ
(Input/Output Request)
Tri-state output, active low. The $\overline{IORQ}$ signal indicates that the lower half of the address bus holds a valid I/O address for a I/O read or write operation. An $\overline{IORQ}$ signal is also generated with an $\overline{M1}$ signal when an interrupt is being acknowledged to indicate that an interrupt response vector can be placed on the data bus. Interrupt Acknowledge operations occur during M_1 time while I/O operations never occur during M_1 time.

RD
(Memory Read)
Tri-state output, active low. $\overline{RD}$ indicates that the CPU wants to read data from memory or an I/O device. The addressed I/O device or memory should use this signal to gate data onto the CPU data bus.

WR
(Memory Write)
Tri-state output, active low. $\overline{WR}$ indicates that the CPU data bus holds valid data to be stored in the addressed memory or I/O device.

RFSH
(Refresh)
Output, active low. $\overline{RFSH}$ indicates that the lower 7 bits of the address bus contain a refresh address for dynamic memories and the current $\overline{MREQ}$ signal should be used to do a refresh read to all dynamic memories.

HALT
(Halt state)
Output, active low. $\overline{HALT}$ indicates that the CPU has executed a HALT software instruction and is awaiting either a non maskable or a maskable interrupt (with the mask enabled) before operation can resume. While halted, the CPU executes NOP's to maintain memory refresh activity.

WAIT
(Wait)
Input, active low. $\overline{WAIT}$ indicates to the Z-80 CPU that the addressed memory or I/O devices are not ready for a data transfer. The CPU continues to enter wait states for as long as this signal is active. This signal allows memory or I/O devices of any speed to be synchronized to the CPU.

INT
(Interrupt Request)
Input, active low. The Interrupt Request signal is generated by I/O devices. A request will be honored at the end of the current instruction if the internal software controlled interrupt enable flip-flop (IFF) is enabled and if the $\overline{BUSRQ}$ signal is not active. When the CPU accepts the interrupt, an acknowledge signal ($\overline{IORQ}$ during M_1 time) is sent out at the beginning of the next instruction cycle. The CPU can respond to an interrupt in three different modes that are described in detail in section 5.4 (CPU Control Instructions).

NMI
(Non-Maskable Interrupt)
Input, negative edge triggered. The non maskable interrupt request line has a higher priority than $\overline{INT}$ and is always recognized at the end of the current instruction, independent of the status of the interrupt enable flip-flop. $\overline{NMI}$ automatically forces the Z-80 CPU to restart to location 0066H. The program counter is automatically saved in the external stack so that the user can return to the program that was interrupted. Note that continuous $\overline{WAIT}$ cycles can prevent the current instruction from ending, and that a $\overline{BUSRQ}$ will override a $\overline{NMI}$.

RESET
Input, active low. RESET forces the program counter to zero and initializes the CPU. The CPU initialization includes:

1) Disable the interrupt enable flip-flop

2) Set Register I = 00_H

3) Set Register R = 00_H

4) Set Interrupt Mode 0

During reset time, the address bus and data bus go to a high impedance state and all control ouput signals go to the inactive state.

BUSRQ
(Bus Request)

Input, active low. The bus request signal is used to request the CPU address bus, data bus and tri-state output control signals to go to a high impedance state so that other devices can control these buses. When BUSRQ is activated, the CPU will set these buses to a high impedance state as soon as the current CPU machine cycle is terminated.

BUSAK
(Bus Acknowledge)

Output, active low. Bus acknowledge is used to indicate to the requesting device that the CPU address bus, data bus and tri-state control bus signals have been set to their high impedance state and the external device can now control these signals.

CLK
(Clock)

Single phase TTL level clock which requires only a 330 ohm pull-up resistor to +5 volts to meet all clock requirements.

PLEASE NOTE:

THE INFORMATION CONTAINED IN THIS SECTION IS TOLD IN AN EASY TO UNDERSTAND MANNER AND IS INTENDED TO AID THOSE WITHOUT AN ELECTRONICS DEGREE IN TROUBLESHOOTING AND REPAIRING THEIR GAMES T.V. MONITOR.

IF YOU READ THROUGH THIS SECTION AND STILL HAVE QUESTIONS, PLEASE CONTACT YOUR DISTRIBUTOR OR MIDWAY MANUFACTURING COMPANY AT THE TOLL FREE NUMBER PROVIDED WITH YOUR GAMES PAPERS.

OUR STAFF AND OUR DISTRIBUTORS STAND READY TO HELP YOU!

THANK YOU

VI T.V. Monitor

Color T.V. Monitor

Introduction: (How to use this section of your manual.)

This section has been designed to simply familiarize you with one of the more mystical components in your game — the T.V. monitor. If you are an electronics technician who is quite knowledgeable on the subject, you may decide to just go to the schematics and start troubleshooting the defective monitor. But if you are like most people, a monitor is a T.V. set, and that means a complex doo-dad that means big buck repairs. This isn't necessarily so. This section of the manual will acquaint you with the monitor and could just help you repair it if you feel adventurous enough to give it a try. If you have any knowledge of electronics, especially the use of a voltmeter, the repairs you can make are astonishing. Just keep in mind that **ELECTRICITY CAN BE VERY DANGEROUS, SO BE CAREFUL!!**

If you want to understand how a monitor works, just read the "THEORY OF OPERATION" subsection. If you wish, you can follow along with the schematics. The information is presented in a very basic manner but more complete treatment of the subject can be found in the technical sections of bookstores.

If you want to attempt to repair your monitor, it would be a good idea to read this whole section beginning to end before starting. **Pay attention to all warnings and take them seriously**. The more equipment you have the better, but a low cost Volt-Ohm-Milliameter can often do the trick. Here are the steps to take:

1. Find the symptom that matches the problems your monitor has in the "SYSTEM — DIAGNOSIS" subsection. The diagnosis tells the circuit or area the problem may be in and possibly even the actual component causing it.
2. Once you have the circuit that is causing the trouble, read the "TROUBLESHOOTING" subsection to learn the procedure for finding the bad part.
3. Next, go to the schematic section and find the schematic that matches your monitor. It may be helpful to read the "DIFFERENCES BETWEEN MONITORS" subsection if you are unsure of which monitor you have. Use the schematic to see what parts are in the offending circuit.

That really is all there is to it. Just remember that there are some bizarre or rare symptoms not covered, or that a monitor may have two or more different problems that only a genius, the experienced, or an experienced genius can figure out. But be patient, follow safety precautions, and remember that there is also literature available from the monitor companies through your distributor or from Midway Manufacturing Company on request. (There is a toll free number on the back side of the front cover of this manual.)

Symptom Diagnosis

1. **Insufficient width or heighth:**
   A. Horizontal line (due to VERTICAL CIRCUIT DEFECT).
      - Bad yoke.
      - Bad vertical output section.
      - Open fusible resistor in vertical section.
      - Bad height control.
      - Bad flyback.

   B. Vertical line (due to HORIZONTAL CIRCUIT DEFECT).
      - Bad yoke.
      - Open width coil.
      - Open part in horizontal output section.

2. **Picture spread out too far or crushed in certain areas:**
   A. Horizontal or vertical output transistor.
   B. Bad component in output circuitry.

3. **Line too close with black spacing:**
   A. Problem in vertical section causing poor linearity.

4. **Poor focus and convergence:**
   A. Bad high voltage transformer ("flyback") or control.
   B. Focus voltage wire not connected to neckboard terminal.

5. **Colors missing; check:**
   A. Interface color transistors.
   B. Color output transistors.
   C. Cracked printed circuit board.
   D. Color circuits.
   E. Video input jack.

6. **Picture not bright enough:**
   A. Weak emission from picture tube. (Turn horizontal sync off frequency and put brightness all the way up for about 15 minutes. Occasionally this cures the problem.)

7. **Silvery effect in white areas; check:**
   A. Beam current transistors.
   B. Weak picture tube emission.

8. **Too much brightness with retrace lines; check:**
   A. Beam limiter transistors.
   B. Brightness and/or color blanking control set too high.

9. **Increasing brightness causes an increase in size and poor focus.**
   A. Weak high voltage rectifier or regulation (high voltage unit).

10. **Small picture and/or poor focus:**
    A. Low B+ voltage (power supply trouble).

11. **Vertical rolling:**
    A. Vertical oscillator transistor, IC, or circuit.
    B. No sync from logic board.

12. **Horizontal line across center:**
    A. Vertical output circuit is dead (see symptom No. 1. A.).
    B. Vertical oscillator is not putting out the right wave form.

13. **Picture bends:**
    A. Horizontal sync needs adjusting.
    B. Magnetic or electromagnetic interference.

14. **Flashing picture, visable retrace lines:**
    A. Broken neck board.
    B. Internal short circuit in the picture tube (arcing).

15. **Unsymmetrical picture or sides of picture:**
    A. Defective yoke.

16. **No brightness, power supply operating — No high voltage for the picture tube; check:**
    A. Horizontal oscillator.
    B. Horizontal amplifier and output.
    C. Flyback transformer (high voltage unit).

17. **No brightness, high voltage present; check:**
    A. Heater voltage to the tube at the neck board.
    B. Screen-grid voltage for the tube.
    C. Focus voltage.
    D. Grid to cathode picture tube bias.

18. **No high voltage; check:**
    A. For AC input to the "flyback".
    B. Horizontal deflection stages.
    C. Flyback transformer.
    D. Yoke.
    E. Power supply.

19. **No horizontal and vertical hold; check:**
    A. Sync transistors and circuit.
    B. Wires and jack from logic board to the monitor.

20. **Wavey picture — (power supply defect); check:**
    A. Transistors, diodes, electrolytic capacitors in the power supply.

21. Moving bars in picture:

A. Ground connector off between monitor and logic boards.

B. Defect in the power supply (see wavy picture symptom).

22. Washed out picture (see picture not bright enough):

A. Check video signal at the cathode pins with an oscilloscope. If there is about 80 volts peak to peak, the picture tube has weak emission.

23. Monitor won't turn on:

A. Problem in the power supply: Check fuse, transistors, open fusible resistor.

B. Shorted horizontal output transistor.

C. Defective high voltage disabling circuit.

D. Crack(s) somewhere on main chassis board.

24. Can't adjust purity or convergence:

A. Use a degausser to demagnetize the picture tube carefully following your degausser's instructions.

B. Picture tube defective.

C. Metal foreign material is in picture tube shield.

D. Nearby equipment is electromagnetically interferring.

E. The poles of the earth are pulling off the purity.

F. Poor focus or width of picture.

Guide To Schematic Symbols

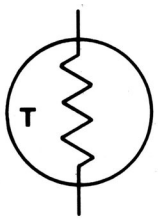

THERMISTOR
(POLARITY DOESN'T MATTER)

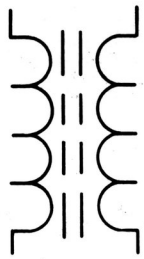

IRON CORE TRANSFORMER
(SUCH AS A FLYBACK)

INDUCTOR, COIL, CHOKE
(POLARITY DOESN'T MATTER)

FUSE
(POLARITY DOESN'T MATTER)

(-) CATHODE

(+) ANODE

ZENER DIODE

CATHODE (-)

ANODE (+)

DIODE

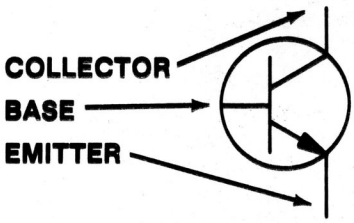

NPN TRANSISTOR

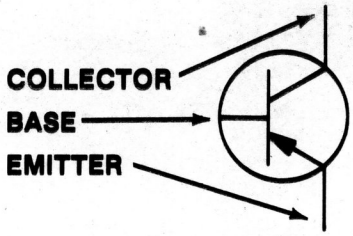

PNP TRANSISTOR

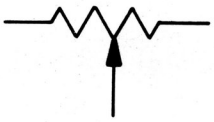

VARIABLE RESISTOR, POT, CONTROL
(POLARITY DOESN'T MATTER)

RESISTOR
(POLARITY DOESN'T MATTER)

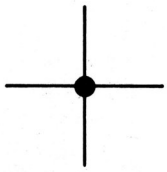

LINES ARE CONNECTED

ELECTROLYTIC CAPACITOR

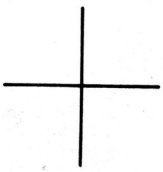

LINES ARE NOT CONNECTED

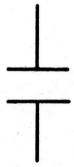

CAPACITOR
(POLARITY DOESN'T MATTER)

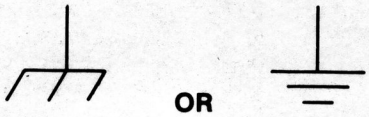

OR

GROUND

Troubleshooting

Troubleshooting monitors requires experience, patience, **and luck**. The first step is to match the symptom the monitor displays to the diagnosis next to it in the "SYMPTOM-DIAGNOSIS" subsection. This will pinpoint the circuit the problem is probably in, and often the parts to check. Next, the circuit should be visually inspected to see if there are any parts broken, burned, or if something is there that shouldn't be, like a loose screw, etc. Some parts go bad before others and should be checked first. In fact, following is the general order in which parts usually go bad:

1. Semiconductors (like transistors, diodes, and integrated circuits).
2. Fusible resistors.
3. Electrolytic capacitors.
4. Resistors.
5. Capacitors and coils.

Always remember that a monitor can bite like a snake. Even when it is turned off, capacitors hold voltage and will discharge it to you should you be touching chassis ground. The picture tube or CRT, itself, is a giant capacitor, so avoid the flyback anode plug hole. With the monitor on, the power supply circuit and/or the flyback, which puts out at least 18,000 volts, **CAN BE KILLERS!!** Avoid handling power transistors (usually output transistors), yoke terminals, and other high power components when the monitor is on.

WARNING: That picture tube is a bomb! When it breaks, first it implodes, then it explodes. Large pieces of glass have been known to fly in excess of 20 feet in all directions. **DO NOT** carry it by the long, thin neck. Discharge its voltage to ground by shorting the anode hole to ground. Use a plastic handled screwdriver, connect one end of a wire with an alligator clip at each end to chassis ground and the other end to the metal shaft of the screwdriver. Using ONE HAND ONLY (put the other in your pocket) and touching ONLY the plastic handle of the screwdriver **(DO NOT TOUCH THE METAL SHAFT)** stick the blade of the screwdriver into the anode hole. Be prepared for a fairly loud pop and a flash. The longer the monitor has been turned off, the smaller the pop and dimmer the flash. But **BE CAREFUL**, picture tubes will hold a very healthy charge for at least **a week** if not longer. Even after you've discharged it once, it may still carry a residual charge. It's better to be too careful than dead, which is why electronic equipment always carries stickers referring servicing to qualified personnel. Handle the side with the viewing screen against your chest when changing it. **ALWAYS** wear safety goggles when handling the picture tube.

To maintain the safety and performance of the monitor, always use exact replacement parts. For instance, the wrong components in the power supply can cause a fire, or the wrong color transistor may give a funny color to the picture. Service your monitor on a nonconductive firm table like wood, **NOT METAL,** and take off all of your jewelry just in case. With all this in mind, you are ready to begin troubleshooting.

Observe the picture carefully. Try to vary the appropriate control that would most likely affect your particular symptom. For example, if there is poor brightness or no picture, try turning up the brightness or contrast control. If the controls have no effect at all, chances are there is trouble with the control itself, the circuit it controls, or a nearby circuit that may be upsetting voltages. Go to the list of symptoms and determine with the schematic where the bad circuit is.

CAUTION:

Keep in mind that capacitors hold a charge as can the picture tube (for at least a week and usually longer), and could shock you.

First, check for obvious visual defects such as broken or frayed wires, solder where it is not supposed to be, missing components, burned components, or cracked printed circuit boards. If everything looks good up to this point, make sure that diodes, electrolytic capacitors, and transistors have their leads connected in the right polarity as shown on the schematic and the circuit board.

Turn on the power and measure the voltages at the leads of the active devices such as tubes, transistors, or integrated circuits. Any voltage that does not come within at least 10% to 15% of the voltage specified on the schematic indicates either a problem with that device or a component connected with it in the circuit. The next step is to use the ohmmeter to narrow down the field of possible offenders.

To test a transistor, one lead of the ohmmeter is placed on the base; and the other lead placed just on the emitter, then on the collector. A normal transistor will read either high resistance (infinite), or little resistance (400 to 900 ohms), depending on the polarity of this type transistor. Then the leads should be switched, one remaining on the base, and the other switched from the emitter to the collector. Now the opposite condition should result: the resistance should be infinite if it was lower when the other lead was on the base. Consistantly infinite readings indicate an open, and a short is demonstrated by 0-30 ohms on most of these test readings. Finally, place one lead on the collector, then the other on the emitter. No matter which lead is used, there should be infinite resistance. Any lower reading, such as 50 ohms (which is typical on a bad transistor), indicates a short.

This all sounds pretty confusing, but a little experience on a good transistor will make you an expert in no time. Usually, the lowest ohmmeter setting is used for testing transistors. Once in a great while a transistor may check out good on this test, but may actually be "leaky" or break down only on higher voltages. If in doubt, change it. It is also wise to check the transistor out of the circuit just in case some component in the circuit is affecting the ohmmeter reading.

A diode is tested like a transistor except it only has two leads. Again, there should be high resistance one way and little resistance the other. If it tests bad, take one lead out of the circuit in case some component is messing up the ohmmeter reading.

NOTE: **DO NOT** leave soldering equipment on the leads too long since all semiconductors, especially integrated circuits, are easily destroyed by heat.

Without special equipment, integrated circuits are checked by verifying the proper DC voltage on the pins and the correct AC wave form using an oscilliscope. **BE CAREFUL:** Shorting their pins can easily destroy them.

Resistors are checked with an ohmeter and should usually be within ten percent of the value stated on them and on the schematic. You may have to desolder one lead from the printed circuit board. If you wreck the foil on the board, carefully solder a small wire over the break to reconnect the conductive foil.

Capacitors are tricky. Their resistance goes up when checked with an ohmmeter which shows a charging action. As they suck up current from the meter, the voltage goes up and so does the resistance. If you are sure a particular circuit is giving you a problem and everything else checks out O.K., Electrolytic capacitors are prime suspects. Substitute a new one and keep your fingers crossed.

Theory of Operation

To understand what goes on inside the monitor, large general groups of circuits will be examined instead of laboriously analyzing the branches and small circuits that make up these groups. This will help avoid confusion and aid in a basic, concrete, knowledge of what makes up a monitor.

THE POWER SUPPLY —

The AC going to the monitor from the game transformer is just like the voltage and current from your wall outlet. It jumps up and down going positive and negative sixty times a second. But a monitor needs nice, smooth DC; direct current, not alternating. So diodes chop up the AC and a big electrolytic capacitor filters it out to make it even smoother. Since the monitor is a big piece of electronic equipment, with many circuits demanding a lot of power from the power supply, there are also zener diodes and transistors to help maintain a nice, constant, smooth voltage so that the monitor circuits don't jump around. And this is what happens when you see a wavy picture. There is AC creeping through the power supply, so it must be malfunctioning. If the voltage from the power supply is too low, the other circuits will be starved for power and you may see a small, wavy picture, or none at all.

Some circuits receive voltages that are higher than what the power supply should put out. But they come from the flyback transformer which will be discussed later.

THE INTERFACE SECTION OF THE CHASSIS —

The interface section of the chassis is fairly easy to identify. It is right by the place where the video jack(s) from the logic board(s) plug into. There are sets of transistors that receive the separate red, green, blue, and sync information from the cables that come from the logic boards. The circuits jack up the voltage and match impedances, or in other words, prepare the logic board outputs for the circuits that will really amplify them for the output devices such as the yoke in the case of the sync, or the picture tube that shows the colors.

An interesting aside is that our sync is composite negative sync. That means two things:

1. The sync is a negative going wave form.
2. There are two pulses going at different speeds over the same wire:
   a. Vertical wave forms at 60 times per second (or Hertz) and
   b. Horizontal wave forms at about 15,750 times per second (Hz).

The sync is amplified by a sync amplifier transistor and sent on its way to the oscillators. The sync or timing information will be explained along with the oscillator shortly.

The color information is sent via wires to the neck board where the main amplification occurs. This will also be discussed later.

VERTICAL AND HORIZONTAL DEFLECTION —

After the sync signal is amplified by the sync amp, it goes to two different sections, the vertical and horizontal circuits. Basically, the sync signals are for timing so the picture doesn't mess up since it is assmebled like an orderly jigsaw puzzle, but so fast that you can't see the electron beams for each color painting the picture on the screen. This will all become clear soon. For now, we will follow the 60 cycle component of the sync as it goes on its journey to the deflection yoke.

The 60 cycle pulse goes to the vertical oscillator to make sure this circuit goes back and forth (or oscillates) at 60 times a second. Without this pulse keeping the circuit at the correct speed, it may get lazy and oscillate at 58 cycles or lower, or get ambitious and oscillate at 62 cycles or higher. At the wrong speed, the picture will start to roll up or down.

A Wells Gardner 13" or 19" color monitor uses transistors for its sync section. An Electrohome 13" or 19" color monitor uses an integrated circuit IC501 for its sync section. The idea is all the same. The output to the vertical amplifying transistors for all monitors must be a sawtooth wave form, sort of like a bunch of pyramids, racing to the yoke's vertical coils at 60 times a second.

Along the way to the output transistors, the 60 cycle pulse is shaped and amplified to do the job: the yoke magnetically pushes the electron beam to fill the screen out sideways looking at the screen with the greatest length going up and down. Or viewing the screen sitting like a home television set. The amplified vertical output fills the screen up and down. Watching a monitor like this, seeing only a horizontal line means a problem with the vertical coils of the yoke or anything from the vertical output section on back to the oscillator.

The horizontal section is very similar with a few exceptions. The horizontal wave shape is more like a square and has a frequency of 15,750 cycles a second. Again, Wells Gardner uses transistors for the horizontal oscillator, and Electrohome uses the other side of IC501. Still, the effect is the same. If the oscillator isn't going at the correct speed, the picture may move sideways, start to slant, or tear up with slanted thin figures. With both the vertical and horizontal of all monitors, there are variable resistors that change the speed of the oscillators up and down. This way you have controls that can make the correct frequencies to keep the electronic jigsaw puzzle nicely locked in place. If you're driving in a car and next to you someone else is driving their car at exactly the same speed, it will appear that they are not moving. And this is why the sync frequency and the oscillators frequencies must match, so the picture doesn't appear to move.

The correct wave form is shaped and amplified in the circuitry just like in the vertical section. But the horizontal output transistor is a large power transistor and not only serves to give current to the horizontal yoke windings, it also feeds the flyback transformer.

THE FLYBACK TRANSFORMER (OR HIGH VOLTAGE UNIT) —

The picture tube needs high voltage to light up, and the power supply can't meet this demand. The flyback transformer receives current alternating at about 15,750 times per second from the horizontal output transistor. The "flyback" jacks up its input voltage and puts out a higher voltage alternating at the same speed. But, in your "flyback" there are diodes that chop up the alternating voltage to make it a smooth DC output just like in the power supply. This is what goes through that thick red wire to your picture tube. THIS AREA HAS ABOUT 18,000 VOLTS ON IT **AND IT CAN KILL YOU!!**

The "flyback" may be dangerous, but it is also generous. It has extra output windings which give voltage to the heater pins of the picture tube, voltage for the vertical deflection circuits, and picture tube screen-grid voltage. So in a way, the high voltage "flyback" is like a second power supply.

COLOR CIRCUITS

The color circuits are pretty straight forward. The signals go into the interface section where some amplification and impedance matching occurs. These circuits are pretty sparse and simple. Each color just has two transistors and a diode with some resistors and capacitors. From here, the AC color signal is sent by wires to the neck board.

The color output circuits are on the neck board. The color signals going to the transistors are controlled by two variable resistors called drive controls. There only two, one for the red and one for the green. The

blue doesn't have one. In the emitter part of each transistor is another variable resistor that is the cut off control. These controls vary the amount of amplified AC signal that goes to the cathodes of the picture tube. The more signal, the more color. The bases of each of these transistors are connected together and are all connected to the blanking and beam limiting transistors which are in the interface section.

The beam limiter helps control the brightness level, and the blanking transistor rapidly turns the picture tube on and off so that retrace lines don't show up on the screen. By turning up the brightness on a good monitor, these four to six retrace lines can be seen slanting diagonally across the picture.

PROTECTION CIRCUIT —

To protect the high voltage section against voltages that are too high coming from the power supply which could cause X-rays to be emitted from the "flyback", a circuit senses the higher power supply voltage, and using a transistor, turns off the horizontal oscillator. Since the horizontal oscillator doesn't work, the horizontal output transistor has nothing to feed the "flyback" which in turn has nothing to feed the picture tube. The monitor will be silent, have no picture, and will appear to be off. **But don't be fooled.** There is still that excessive amount of voltage coming from the power supply. To find out, check the emitter on TR502 of the Wells Gardner monitors; or the emitter of X04 for the Electrohome monitor. Here are the voltages you should receive:

Wells Gardner = 127VDC
Electrohome = 120VDC

The best place to measure this voltage on an Electrohome monitor is at a pin marked B1 on the chassis. This is because a 13 inch color Electrohome monitor, the G07-FB0 or G07-902, has an integrated circuit and very little else in the power supply. Still, there should be 120VDC at B1.

THE PICTURE TUBE (OR CRT) —

The picture tube or CRT is an output device. In other words, the end result of the circuits work is displayed by this part. Actually, the output of other circuits is in the neck of the picture tube.

First, there is the heater. The heater boils off electrons from the cathodes so that they (the electrons) shoot up to the screen to excite the phosphors so that the three phosphors emit three colors of light.

The cathodes are next, and again they emit electrons to turn on the tube phosphors, making it glow. The cathode can arc or short to the heater resulting in no picture and a defective picture tube.

Next come the grids. The first grid is grounded. The following grid is the screen grid which receives about 300VDC depending on the brightness setting. The next grid closest to the picture tube screen is the focus grid which gets about one fifth the amount of voltage that is applied to the picture tube anode.

After jetting from the cathode through all these grids, the electrons speed through a mask, a sheet of material with tiny holes, and then excite the tiny dots of phosphor in the inside surface of the picture tube screen. The green electron gun (or cathode and circuitry) spits out electrons which head for the green phosphors only. The same goes for the red and blue guns. The way the phosphor light blends determines the color seen. Should these electron beams become too intense, they may burn the phosphor. With the monitor off, this can be seen as a dark permanent image of the video information on the tube screen.

Differences Between Monitors

The easiest way to identify the brand of monitor you are working with, assuming you can't find the brand name written on it anywhere, is to see if there are two circuit boards rising up from the chassis toward the picture tube neck. In other words, they stand up, or are perpendicular to the chassis, with a black plastic bracket holding them in place. This is a description of a Wells Gardner monitor. They use separate boards for main chunks of circuitry. Therefore, you have a "power board" (the power supply), an "interface board" (the interface section), and a "horizontal/vertical board" (for the deflection circuitry). Still, there are a few parts on the chassis, but most can be found on the board. An Electrohome monitor has no separate boards, except for the neck board, and just has a flat chassis.

Another good way to determine which monitor you have is to check the transistor call out numbers that are printed on the chassis next to the part. For instance, on the neck board, one of the color output transistors is TR401. If you look through the schematics or the parts lists, you will find TR401 in the Wells Gardner literature. On the other hand, the neck board transistor may say X101. X101 can be found in the Electrohome literature. So, all Wells Gardner transistor call outs begin with TR, and Electrohome transistor call outs start with an "X".

Parts Interchangeability

Some parts can be interchanged on all of the monitors. Here are the rules:

1. You **CAN** swap the voltage regulator TR502 or X01 on any Wells Gardner or Electrohome 19 inch monitor. You **CAN NOT** swap the voltage regulator on the 13 inch Wells Gardner or Electrohome (G07-902) since the Electrohome uses an integrated circuit for the power supply.

2. You **CAN** swap any resistor between monitors that has the same resistance, wattage rating, and tolerance.

3. You **CAN** swap any capacitor between monitors that has the same capacitance, and voltage rating.

4. **PICTURE TUBES:**
   Due to the fact that "ELECTROHOME" is now (October, 1981) using a picture tube with an **internal shield,** these picture tubes can be used in EITHER "WELLS GARDNER" or "ELECTROHOME" monitors.
   However, a "WELLS GARDNER" picture tube can **ONLY** be used in a "WELLS GARDNER" monitor. It will not function properly if installed in an "ELECTROHOME" monitor. The picture purity will be off.

5. You **CAN NOT** change any part that is a **safety part**, one that is shaded in gray on the schematic; it **MUST** be **IDENTICAL** to the original. **To do otherwise IS DANGEROUS.** For instance, the 13 inch Electrohome (G07-904) monitor "flyback". looks identical to the 19 inch Electrohome (G07-904) monitor "flyback".
   In fact, there is even a 19 inch Electrohome (G07-905) monitor (which is an obsolete model) with a similar looking "flyback". **NONE OF THESE ARE INTERCHANGEABLE!!**

6. You **CAN** change any of the parts between the G07-904 and G07-907. They're essentially the same monitor except that the G07-907 has a vertically mounted picture tube.

If there is any doubt about what parts can be swapped between each manufacturer's 19 inch and 13 inch models, compare the manufacturer's part number between each one. If they match up, they are the same part.

WELLS-GARDNER 19" COLOR

M051-000

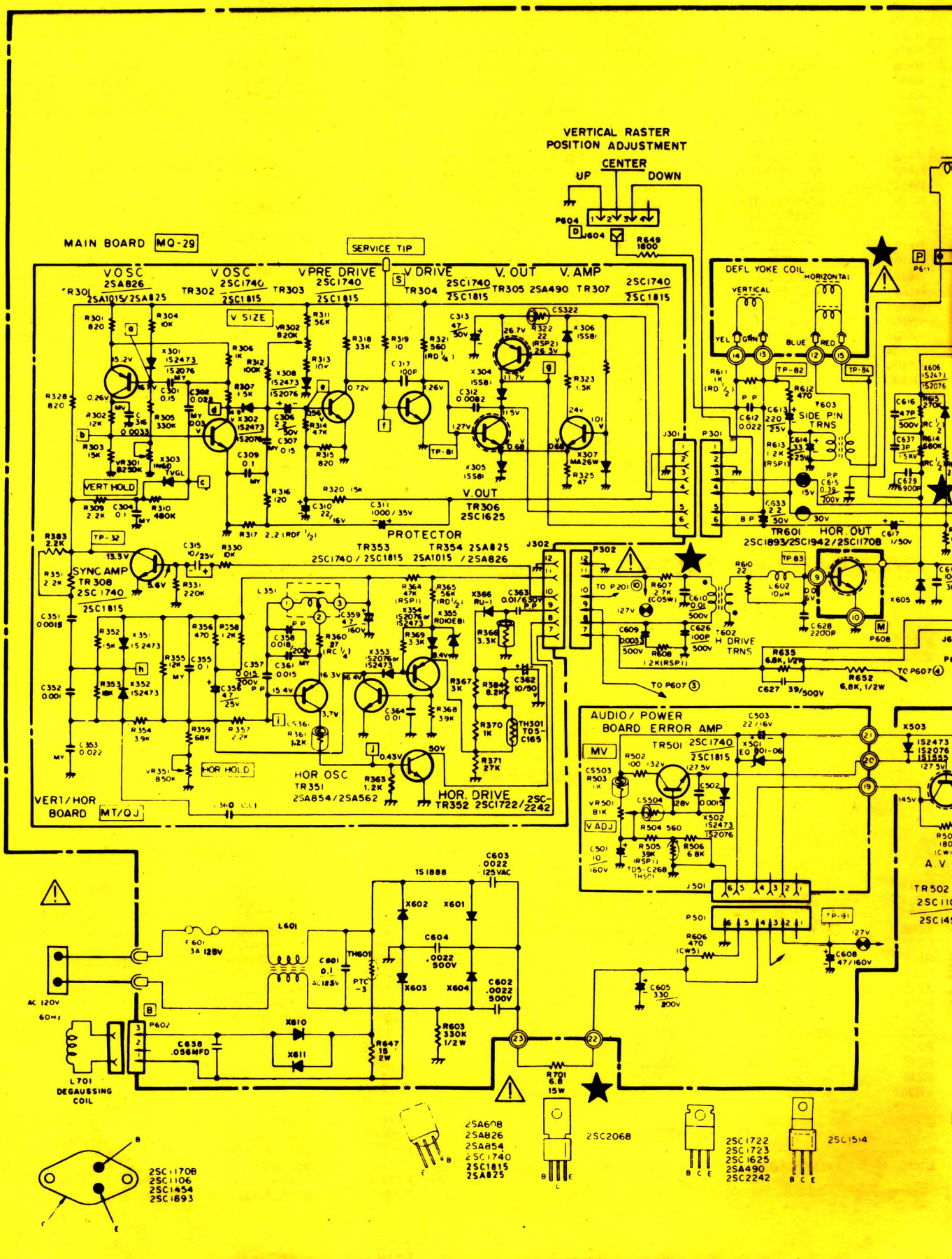

NECK BOARD (MS/QG)

Ref. No.	Part No.	Description
RESISTORS		
R401	203X6500-709	1.8k Ohm ± 5% 1/8W Carbon
R402	203X6500-709	1.8k Ohm ± 5% 1/8W Carbon
R403	203X6500-709	1.8k Ohm ± 5% 1/8W Carbon
R404	203X6500-447	150 Ohm ± 5% 1/8W Carbon
R405	203X6500-481	220 Ohm ± 5% 1/8W Carbon
R406	203X6500-447	150 Ohm ± 5% 1/8W Carbon
R407	203X6500-508	270 Ohm ± 5% 1/8W Carbon
R408	203X6500-508	270 Ohm ± 5% 1/8W Carbon
R409	203X6500-800	4.7k Ohm ± 5% 1/8W Carbon
R410	203X6500-800	4.7k Ohm ± 5% 1/8W Carbon
R411	203X6500-800	4.7k Ohm ± 5% 1/8W Carbon
R412	203X9104-809	12k Ohm ± 5% 2.0W Metal Oxide
R413	203X9104-809	12k Ohm ± 5% 2.0W Metal Oxide
R414	203X9104-809	12k Ohm ± 5% 2.0W Metal Oxide
R415	203X5601-313	2.7k Ohm ± 10% 1/2W Comp.
R416	203X5601-313	2.7k Ohm ± 10% 1/2W Comp.
R417	203X5601-313	2.7k Ohm ± 10% 1/2W Comp.
R418	203X5602-254	470k Ohm ± 10% 1/2W Comp.
R419	203X5602-185	330k Ohm ± 10% 1/2W Comp.
R422	203X9105-117	1.0 Ohm ± 10% 2W Metal Oxide
R423	203X5102-155	270k Ohm ± 5% 1/4W Carbon
VR401	204X2115-014	500 Ohm Varistor R Drive
VR402	204X2115-014	500 Ohm Varistor B Drive
VR403	204X2115-006	5k Ohm Varistor R Cutoff
VR404	204X2115-006	5k Ohm Varistor G Cutoff
VR405	204X2115-006	5k Ohm Varistor B Cutoff
VR406	204X2000-025	1M Ohm Varistor Screen
CAPACITORS		
C401	202X7000-247	1000 pF, 50V, 10% Ceramic
C402	202X7000-247	1000 pF, 50V, 10% Ceramic
C403	202X7000-247	1000 pF, 50V, 10% Ceramic
C404	202X7110-019	1500 pF, 2kV ± 10% Ceramic
C405	202X7150-018	100 pF, 12kV, ± 10% Ceramic
C406	202X7050-483	.01 uF, 500V, ± 10% Ceramic
C407	202X7110-019	1500 pF, 2kV ± 10% Ceramic
C408	202X8000-550	68 pF, 50V, ± 10% Ceramic
C409	202X8000-550	68 pF, 50V, ± 10% Ceramic
C410	202X8000-550	68 pF, 50V, ± 10% Ceramic
SEMICONDUCTORS		
TR401	200X3206-800	Transistor, 2SC2068, 2SC1514 (R output)
TR402	200X3206-800	Transistor, 2SC2068, 2SC1514 (G output)
TR403	200X3206-800	Transistor, 2SC2068, 2SC1514 (B output)
X404	201X2100-126	Diode, IS2367 (protector)
X405	201X2100-126	Diode, IS2367 (protector)
X406	201X2100-126	Diode, IS2367 (protector)
MISCELLANEOUS		
J401	206X5003-729	Socket, 5 Pin
J402	206X5003-983	Socket, 3 Pin
P401	204X9600-329	Plug, 5 Pin
P402	204X9600-254	Plug, 3 Pin

△★ 297X2000-072 HIGH VOLTAGE ASSEMBLY (T701)

△★R701	204X1625-058	3.3 Ohm, ± 10% 10W WW Resistor
VR702	204X3901-125	Focus Control
X701		Diode (SI HV) }
X702		Diode (SI HV) } Part of T701
X703		Diode (SI HV) }

FINAL ASSEMBLY PARTS

△★88X-0129-506	19VJTP22 Pix Tube
38A5554-000	Assy. Purity Shld/Degaussing
205X9800-256	Lateral/Purity Assembly
△★202X1110-810	Yoke, Deflection
208X2000-946	CRT Socket
297X2000-072	HV Unit (T701)
6A0397	Plug, Line Cord
9A2753-003	Degaussing Coil (L701)

INTERFACE BOARD (P305)
(MODEL 19K4606)

Ref. No.	Part No.	Description
RESISTORS		
R201	340X3910-934	91 Ohm, 5%, 1/2W Carbon
R203	340X3102-934	1k Ohm, 5%, 1/2W Carbon
R204	340X2101-934	100 Ohm, 5%, 1/4W Carbon
R206	340X3331-944	330 Ohm, 10%, 1/2W Carbon
R207	340X3102-934	1k Ohm, 5%, 1/2W Carbon
R208	340X3152-934	1.5k Ohm, 5%, 1/4W Carbon
R209	340X2101-934	100 Ohm, 5%, 1/4W Carbon
R210	340X3102-934	1k Ohm, 5%, 1/2W Carbon
R211	340X2331-934	330 Ohm, 5%, 1/4W Carbon
R212	340X2331-934	330 Ohm, 5%, 1/4W Carbon
R213	340X2331-934	330 Ohm, 5%, 1/4W Carbon
R214	340X2201-934	200 Ohm, 5%, 1/4W Carbon
R215	340X2201-934	200 Ohm, 5%, 1/4W Carbon
R216	340X2201-934	200 Ohm, 5%, 1/4W Carbon
VR201	40X0590-017	1.5k Ohm, Black Level Control
CAPACITORS		
C201	45X0524-038	1000 uF, 16V Electrolytic
SEMICONDUCTORS		
TR201	86X0121-001	Transistor (NPN)
TR202	86X0121-001	Transistor (NPN)
TR203	86X0121-001	Transistor (NPN)
TR204	86X0066-001	Transistor (PNP)
TR205	86X0066-001	Transistor (PNP)
TR206	86X0066-001	Transistor (PNP)
TR207	86X0121-001	Transistor (NNP)
TR208	86X0121-001	Transistor (NPN)
TR209	86X0121-001	Transistor (NPN)
ZD201	66X0040-018	Diode, Zener, 6.8v, 5%, 0.5W
ZD202	66X0040-019	Diode, Zener, 3.9v, 5%, 0.5W
MISCELLANEOUS		
J201	204X9300-958	Socket, 6 Pin
J202	204X9300-958	Socket, 6 Pin
J203	206X5019-207	Socket, 4 Pin
P201	204X9601-195	Plug, 6 Pin
P202	204X9601-195	Plug, 6 Pin
P203	204X9600-845	Plug, 4 Pin
P205	6A0393-006	Plug, 6 Pin

MONITOR SCHEMATIC DIAGRAM

-A012

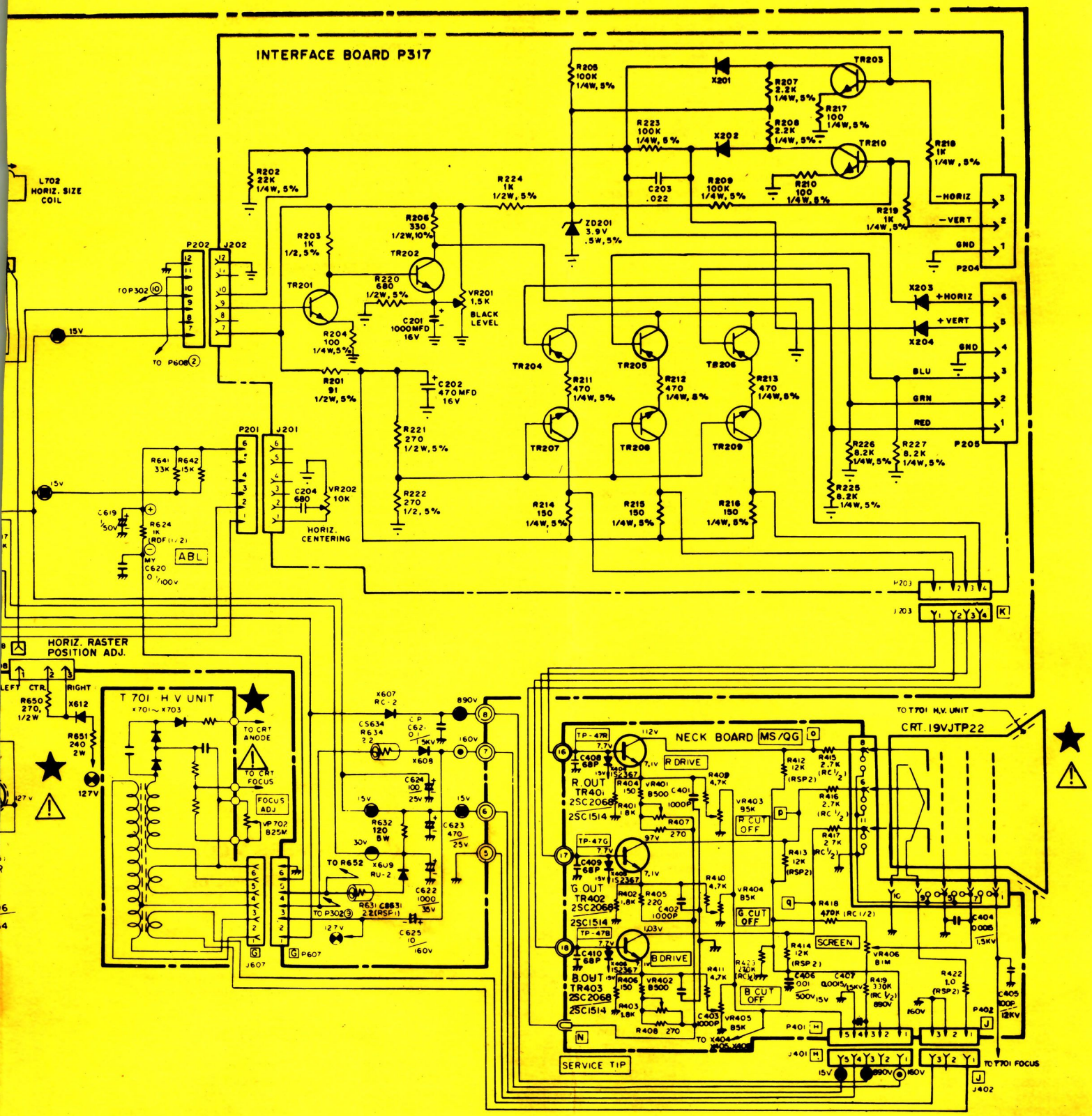

VERT/HOR BOARD (MT/QJ)

RESISTORS

Ref. No.	Part No.	Description
R301	203X6500-628	820 Ohm, ± 5%, 1/8W Carbon
R302	203X6500-902	12k Ohm, ± 5%, 1/8W Carbon
R303	203X6500-927	15k Ohm, ± 5%, 1/8W Carbon
R304	203X6500-886	10k Ohm, ± 5%, 1/8W Carbon
R305	203X6501-241	330k Ohm, ± 5%, 1/8W Carbon
R306	203X6500-645	1k Ohm, ± 5%, 1/8W Carbon
R307	203X6500-689	1.5k Ohm, ± 5%, 1/8W Carbon
R309	203X6500-724	2.2k Ohm, ± 5%, 1/8W Carbon
R310	203X6501-285	470k Ohm, ± 5%, 1/8W Carbon
R311	203X6501-065	56k Ohm, ± 5%, 1/8W Carbon
R312	203X6501-126	100k Ohm, ± 5%, 1/8W Carbon
R313	203X6001-326	10k Ohm, ± 5%, 1/8W Carbon
R314	203X6501-044	47k Ohm, ± 5%, 1/8W Carbon
R315	203X6500-628	820 Ohm, ± 5%, 1/8W Carbon
R316	203X6500-420	120 Ohm, ± 5%, 1/8W Carbon
R317	203X6206-441	2.2 Ohm, ± 5%, 1/2W Carbon
R319	203X6500-169	100 Ohm, ± 5%, 1/8W Carbon
R320	203X6500-927	15k Ohm, ± 5%, 1/8W Carbon
R321	203X6700-509	560 Ohm, ± 5%, 1/2W Carbon
R322	203X9100-121	22 Ohm, ± 5%, 2W M.O.
R323	203X6500-689	1.5K Ohm, ±5%, 1/8W Carbon
R324	203X6500-988	27k Ohm, ± 5%, 1/8W Carbon
R325	203X6500-326	47 Ohm, ± 5%, 1/8W Carbon
R328	203X6500-628	820 Ohm, ± 5%, 1/8W Carbon
R330	203X6500-886	10k Ohm, ± 5%, 1/8W Carbon
R331	203X6501-209	220k Ohm, ± 5%, 1/8W Carbon
R351	203X6500-724	2.2k Ohm, ± 5%, 1/8W Carbon
R352	203X6500-927	15k Ohm, ± 5%, 1/8W Carbon
R353	203X6500-944	18k Ohm, ± 5%, 1/8W Carbon
R354	203X6500-783	3.9k Ohm, ± 5%, 1/8W Carbon
R355	203X6500-902	12k Ohm, ± 5%, 1/8W Carbon
R356	203X6500-561	470 Ohm, ± 5%, 1/8W Carbon
R357	203X6500-724	2.2k Ohm, ± 5%, 1/8W Carbon
R358	203X6500-666	1.2k Ohm, ± 5%, 1/8W Carbon
R359	203X6501-088	68k Ohm, ± 5%, 1/8W Carbon
R360	203X5500-471	27 Ohm, ± 5%, 1/4W Comp.
R361	203X6000-998	1.2k Ohm, ± 5%, 1/8W Carbon
R363	203X6500-666	1.2k Ohm, ± 5%, 1/8W Carbon
R364	203X9014-988	47k Ohm, ± 5%, 1W M.O.
R365	203X6700-989	56k Ohm, ± 5%, 1/2W Carbon
R366	203X6001-148	3.3k Ohm, ±5%, 1/8W Carbon
R367	340X2222-734	2.2k Ohm, ± 5%, 1/2W Carbon
R368	203X6500-785	3.9k Ohm, ± 5%, 1/8W Carbon
R369	203X6500-762	3.3k Ohm, ± 5%, 1/4W Carbon
R370	302X6100-961	1k Ohm, ± 5%, 1/4W Carbon
R371	203X6104-751	2.7k Ohm, ± 5%, 1/4W Carbon
VR301	204X2122-093	Varistor, 250K Ohm, Vert. Hold
VR302	204X2114-065	Varistor, 20K Ohm, Vert. Size
VR351	204X2114-059	Varistor, 50K Ohm, Hor. Hold

CAPACITORS

Ref. No.	Part No.	Description
C301	203X1100-928	0.15 uF, 50V, ± 10% Mylar
C302	203X1100-573	0.022 uF, 50V, ± 10% Mylar
C304	203X1100-858	0.1 uF, 50V, ± 10% Mylar
C306	203X0025-026	2.2 uF, 50V, Electrolytic
C307	203X1100-928	0.15 uF, 50V, ± 10% Mylar
C309	203X1100-858	0.1 uF, 50V, ± 10% Mylar
C310	203X0010-011	22 uF, 16V Electrolytic
C311	203X0020-099	1000 uF, 35V Electrolytic
C312	202X7000-469	0.0082 uF, 50V, ± 10% Ceramic

CAPACITORS (CONT.)

Ref. No.	Part No.	Description
C313	203X0025-087	47 uF, 50V Electrolytic
C315	203X0015-082	10 uF, 25V Electrolytic
C316	203X1100-220	3300 uF, 50V, ± 10% Mylar
C317	202X8000-616	100 pF, 50V, ± 10% Ceramic
C351	202X7000-281	1500 pF, 50V, ± 10% Ceramic
C352	202X7000-247	1000 pF, 50V, ± 10% Ceramic
C353	203X1100-573	0.022 uF, 50V, ± 10% Mylar
C355	203X1100-858	0.1 uF, 50V, ± 10% Mylar
C356	203X0015-105	4.7 uF, 25V Electrolytic
C357	203X1201-013	0.015uF, 200V ± 10% PP
C358	203X1201-034	0.018 uF, 200V, ± 10% PP
C359	203X0040-013	4.7 uF, 160V Electrolytic
C360	202X7000-482	0.01 uF, 50V, ± 10% Ceramic
C361	203X1100-509	0.015 uF, 50V, ± 10% Mylar
C362	203X0025-058	10 uF, 50V Electrolytic
C363	203X1205-487	0.01 uF, 630V, ± 10% PP
C364	202X7000-482	0.01 uF, 50V, ± 10% Ceramic

SEMICONDUCTORS

Ref. No.	Part No.	Description
TR301	200X4082-614	Transistor, 2SA826Q
TR302	200X3174-006	Transistor, 2SC1740Q
TR303	200X3174-006	Transistor, 2SA1740Q
TR304	200X3174-006	Transistor, 2SC1740Q
TR305	200X4049-081	Transistor, 2SA490YLBGLI
TR306	200X3162-538	Transistor, 2SC1625YLBGLI
TR307	200X3174-014	Transistor, 2SC1740R
TR308	200X3174-006	Transistor, 2SC1740Q
TR351	200X4085-415	Transistor, 2SA854Q
TR352	200X3172-208	Transistor, 2SC1722BKS
TR353	200X3174-006	Transistor, 2SC1740Q
TR354	200X4082-614	Transistor, 2SA826Q
X301	201X2010-144	Diode, (SI) IS2473-T72
X302	201X2010-144	Diode, (SI) IS2473-T72
X303	200X8000-026	Diode, (GE), IN60TVGL
X304	200X8010-165	Diode (SI) ISS81
X305	201X2010-165	Diode (SI) ISS81
X306	201X2010-165	Diode (SI) ISS81
X307	200X8010-102	Diode (SI) MA26W
X308	200X8010-094	Diode (SI) IS2473
X351	201X2010-144	Diode (SI) IS2473-T72
X352	201X2010-144	Diode (SI) IS2473-T72
X353	201X2010-144	Diode (SI) IS2473-T72
X354	201X2010-144	Diode (SI) IS2473-T72
X355	200X8220-851	Diode (Zener) RD10EBI
X366	200X8100-130	Diode (HS) RU-1 0.3 US

MISCELLANEOUS

Ref. No.	Part No.	Description
J301	204X9300-958	Socket, 6 Pin
J302	204X9300-958	Socket, 6 Pin
P301	204X9601-195	Plug, 6 Pin
P302	204X9601-195	Plug, 6 Pin
TH301	201X0000-534	Thermistor

TRANSFORMERS & COILS

Ref. No.	Part No.	Description
L351	201X5200-091	Coil, Horiz. Osc.

POWER BOARD (MV)

RESISTORS

Ref. No.	Part No.	Description
R501	204X1725-052	180 Ohm, ± 10%, 15W WW
R502	203X6000-608	100 Ohm, ± 5%, 1/8W Carbon
R503	203X6000-960	1k Ohm, ± 5%, 1/8W Carbon
R504	203X6000-879	560 Ohm, ± 5%, 1/8W Carbon
R505	203X9014-965	39k Ohm, ± 5%, 1W M.O.
R506	203X6500-842	6.8k Ohm, ± 5%, 1/8W Carbon
R551	203X6500-420	120 Ohm, ± 5%, 1/8W Carbon
VR501	204X2050-001	Varistor Vert. Adj.

CAPACITORS

Ref. No.	Part No.	Description
C501	203X0040-020	10 uF, 160V Electrolytic
C502	202X7000-281	1500 pF, 50V, ± 10% Ceramic
C503	203X0010-011	22 uF, 16V Electrolytic
C551	203X0005-046	220 uF, 10V Electrolytic

SEMICONDUCTORS

Ref. No.	Part No.	Description
TR501	200X3174-006	Transistor, 2SC1740Q
△★TR502	200X3145-404	Transistor, 2SC1454
TR551	200X3172-305	Transistor, 2SC1723
X501	201X2230-042	Diode, (SI) Zener EQB01-06V
X502	201X2010-144	Diode, (SI) IS2473-T72

MISCELLANEOUS

Ref. No.	Part No.	Description
J501	204X9300-958	Socket, 6 Pin
P501	204X9601-195	Plug, 6 Pin
TH501	201X0000-618	Thermistor

REPLACEMENT PARTS LIST - ELECTROHOME 19'' MONITOR

Components identified by the ⚠ symbol in the PARTS LIST and on the Schematic have special characteristics important to safety.

DO NOT degrade the safety of the set through improper servicing.

Abbreviations for Resistors and Capacitors

Resistor			**Capacitor**		
C R	:	Carbon Resistor	C Cap.	:	Ceramic Capacitor
Comp. R	:	Composition Resistor	M Cap	:	Mylar Capacitor
OM R	:	Oxide Metal Film Resistor	E Cap.	:	Electrolytic Capacitor
V R	:	Variable Resistor	BP E Cap.	:	Bi-Polar (or Non-Polar) Electrolytic Capacitor
MF R	:	Metal Film Resistor			
CMF R	:	Coating Metal Film Resistor	MM Cap.	:	Metalized Mylar Capacitor
UNF R	:	Nonflammable Resistor	PP Cap.	:	Polypropylene Capacitor
F R	:	Fusible Resistor	MPP Cap.	:	Metalized PP Capacitor
			PS Cap	:	Polystyrol Capacitor
			Tan. Cap.	:	Tantal Capacitor

NOTE: When ordering replacement parts please specify the part number as shown in this list including part name, and model number. Complete information will help expedite the order.

Use of substitute replacement parts which do not have the same safety characteristics as specified, may create shock, fire or other hazards. For maximum reliability and performance, all parts should be replaced by those having identical specifications.

SERVICE REPLACEMENT PARTS LIST

Symbol	**Description**	**Part Number**
	Main P.C.B. Ass'y	SU-1133A
	CRT Socket P.C.B. Ass'y	SU-3032A
	Purity Shield Ass'y	07-220083-03

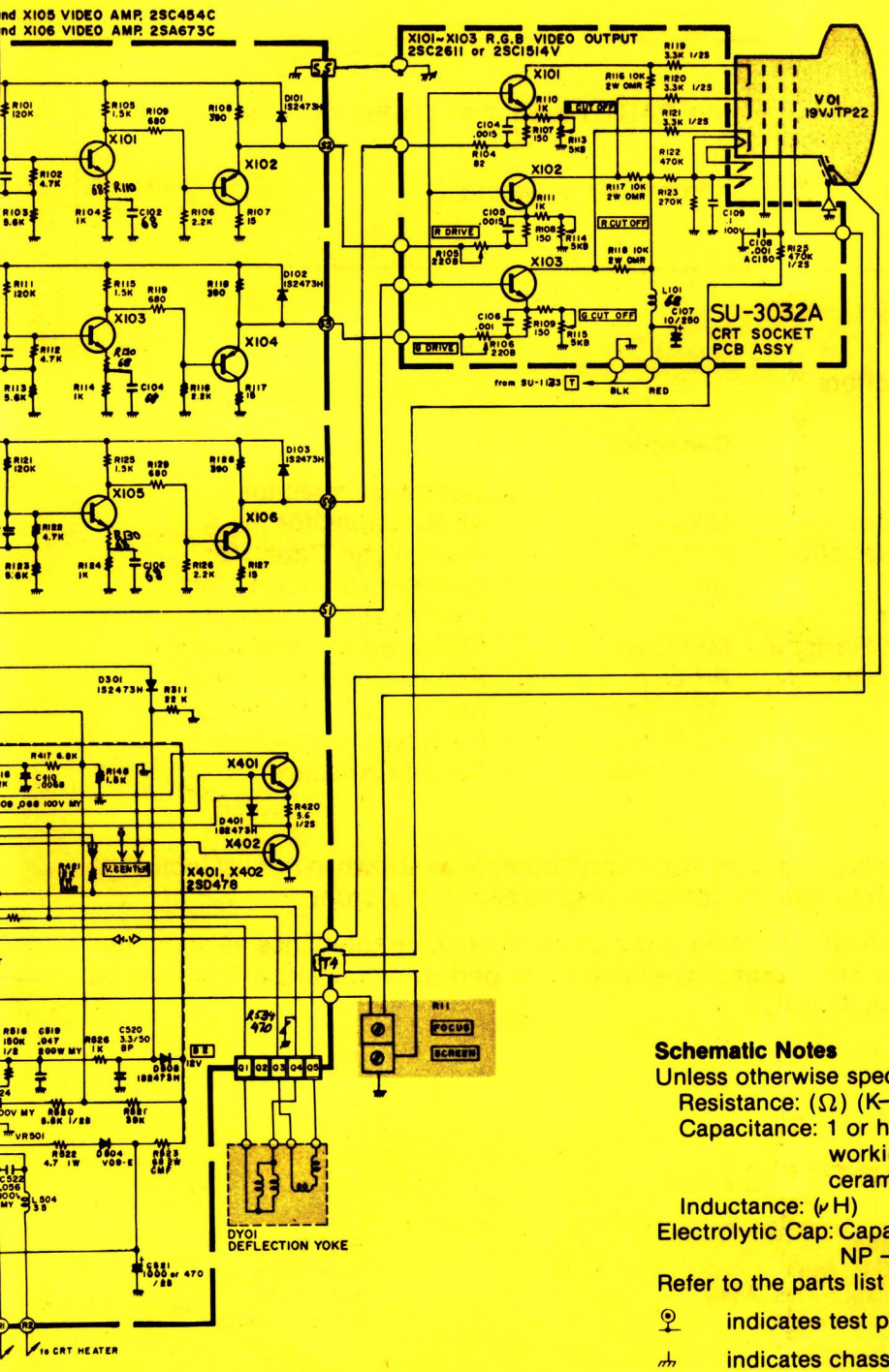

Schematic Notes

Unless otherwise specified

Resistance: (Ω) (K→KΩ, M→MΩ), 1/4 (W) carbon resistor

Capacitance: 1 or higher→ (pF), less than 1→ (μF)
working voltage→ 50 (V)
ceramic capacitor

Inductance: (μH)

Electrolytic Cap: Capacitance Value (μF)/working voltage (V),
NP → non-polar (or bipolar) electrolytic cap.

Refer to the parts list for additional component information.

⊙ indicates test point connection

⏚ indicates chassis ground unless otherwise specified

Hz indicates cycles per second

For **safety** purposes (and continuing reliability)

⚠ replace all components marked with safety symbol with identical type.
NOTE: FR → fusible resistor

00-4147-04
G07-CB0

Parts identification on circuit boards:
e.g. SU1126A (R107 = R1107)
SU3030A (R113 = R3113)

Outside of the P.C.B. Ass'y

Symbol	Description	Part Number
	Picture Tube 19"	17-7198-03
⚠	⚠Deflection Yoke	A29779-D = 21-141-01
	PC Magnet	A75034-B = 29-32-01
⚠	⚠Flyback Transf.	A29951-B
⚠	⚠HVR	A46600-A
R05	UNF Resistor 220Ω,25W K	QRF258K-221
C04	C Capacitor 150pF, AC1.5KV	QCZ0101-005
X01	Si. Transistor	2SD870
X02	Si. Transistor	2SC1106A
SC	Screw #8-⅜	31-610818-06
SC	Screw ¼ x ¾ Pix Tube Mtg. (4)	31-601418-12
WA	Pyramidal Lock Washer (4)	33-255-01
	Nut Retainer, Pix Tube Mtg. (4)	33-494-01
	Clip — P.C.B. Support	33-629-02
	Standoff	33-670-010R-02
	Wire Terminal (Gnd. Strap)	34-228-03
	Terminal Lug (Gnd.)	34-33-04
	Groundstrap Assy.	34-574-02
	Grounding Spring	35-212-03
	Wire Hook (Gnd. Strap)	35-3053-02
	Purity Shield Holddown Clamp	35-2348-01
	Support Brkt. RH	35-3890-01
	Support Brkt. LH	35-3890-02
	Chassis Base	38-449-02
	Yoke Wedge (3)	39-1233-01

Purity Shield Ass'y. Parts List

Symbol	Description	Part Number
	Degaussing Coil	21-1007-30
D911, D912	Rectifier 1 Amp 600V (2)	28-22-27
	Pin Terminal (2)	34-708-01
	Pin Terminal Housing	34-709-01
	Purity Shield (2 pcs.)	35-3847-01
	Purity Shield (2 pcs.)	35-3847-02
C911	Capacitor 100nF 10% 400V	48-171544-62
R921	Resistor, Wirewound 33Ω, 4W	42-113301-03
	Fire Retardent Term. Strip 4 Lug	34-492-09

CRT Socket P.C.B. Ass'y (SU-3032A) Parts List

Resistors

Symbol	Description	Part Number
R3105	V R 200	QVZ3234-022
R3106	V R 200	QVZ3234-022
R3113	V R 5K	QVZ3234-053
R3114	V R 5K	QVZ3234-053
R3115	V R 5K	QVZ3234-053
R3116	OM R 10KΩ2W J	QRG029J-103
R3117	OM R 10KΩ2W J	QRG029J-103
R3118	OM R 10KΩ2W J	QRG029J-103
R3119	Comp. R 3.3KΩ½W K	QRZ0039-332
R3120	Comp. R 3.3KΩ½W K	QRZ0039-332
C3121	Comp. R 3.3KΩ½W K	QRZ0039-332

Capacitors

Symbol	Description	Part Number
C3107	E Cap. 10uF 250V A	QEW53EA-106
C3108	C Cap. 1000pF DC1400V P	QCZ9001-102M

Coils

Symbol	Description	Part Number
L3101	Peaking Coil	QQL043K-101

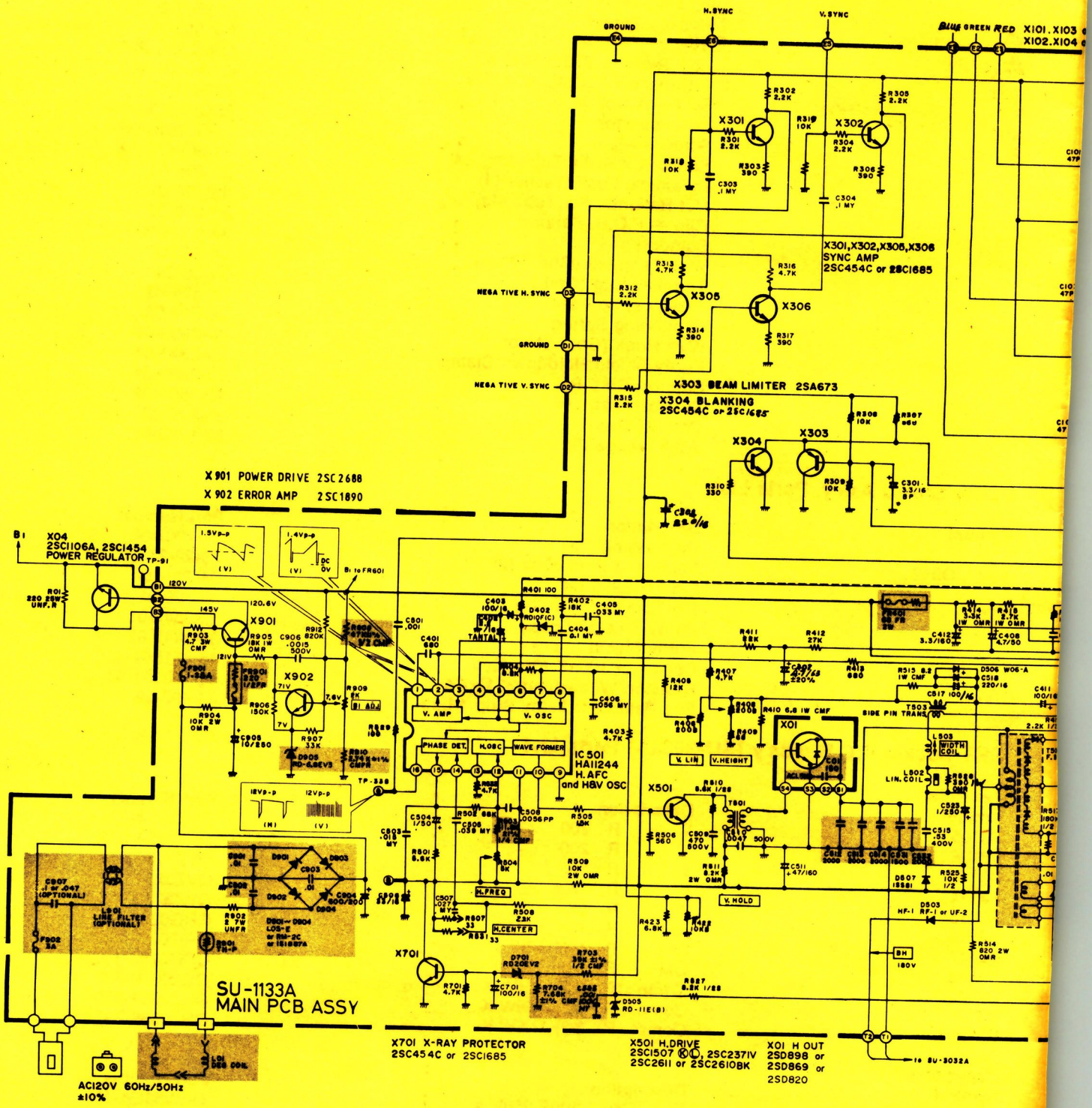
X901 POWER DRIVE 2SC2688
X902 ERROR AMP 2SC1890
X04 2SC1106A, 2SC1454 POWER REGULATOR
X301,X302,X305,X306 SYNC AMP 2SC454C or 2SC1685
X303 BEAM LIMITER 2SA673
X304 BLANKING 2SC454C or 2SC1685
IC 501 HA11244 H. AFC and H&V OSC
SU-1133A MAIN PCB ASSY
X701 X-RAY PROTECTOR 2SC454C or 2SC1685
X501 H.DRIVE 2SC1507 (K), 2SC2371V 2SC2611 or 2SC2610BK
X01 H OUT 2SD898 or 2SD869 or 2SD820
AC120V 60Hz/50Hz ±10%
GROUND
H. SYNC
V. SYNC
NEGATIVE H. SYNC
NEGATIVE V. SYNC
V. AMP
V. OSC
PHASE DET.
H.OSC
WAVE FORMER
H.FREQ
H.CENTER
V. HOLD
V. LIN
V. HEIGHT
SIDE PIN TRANS.
LINE FILTER (OPTIONAL)

Semiconductors Symbol	Description	Part Number
X3101	Si. Transistor	2SC1514VC
X3102	Si. Transistor	2SC1514VC
X3103	Si. Transistor	2SC1514VC

Miscellaneous Symbol	Description	Part Number
⚠	⚠CRT Socket	A76068

Main PCB Ass'y (SU-1133A) Parts List

Resistors Symbol	Description	Part Number
R1406	V R 200Ω	QVZ3230-002
R1408	V R 200Ω	QVZ3230-002
R1410	CMF R 6.8Ω1W J	QRX019J-6R8
R1414	OM R 3.3KΩ1W J	QRG019J-332
R1415	OM R 2.7KΩ1W J	QRG019J-272
R1421	OM R 12KΩ2W J	QRG026J-123Z
R1422	V R 10KΩ	QVZ3230-014
⚠FR1401	⚠F R 68Ω2W K	QRH024K-680M
⚠R1503	⚠CMF R 11.8KΩ¼W +1%	QRV142F-1182
R1504	V R 5KΩ	QVZ3230-053
R1509	OM R 10KΩ2W J	QRG026J-103Z
R1512	OM R 8.2KΩ2W J	QRG026J-822Z
R1514	OM R 820Ω2W J	QRG026J-821Z
R1515	CMF R 8.2Ω1W J	QRX019J-8R2
R1522	CMF R 4.7Ω1W J	QRX019J-4R7
R1523	OM R 68Ω2W J	QRG026J-680Z
R1528	OM R 390Ω1W J	QRG019J-391
R1534	ZN R	ERZ-C05ZK471
VR1501	ZN R	ERZ-C05DK271
⚠R1703	⚠CMF R 39Ω½W +1%	QRV122F-3902
⚠R1704	⚠CMF R 7.68KΩ¼W +1%	QRV142F-7681
⚠R1901	⚠Posistor	A75414
R1902	UNF R 2Ω7W K	QRF076K-2R0
R1903	CMF R 4.7Ω3W J	QRX039J-4R7
R1904	OM R 10KΩ2W J	QRG026J-103Z
R1905	OM R 18KΩ1W J	QRG019J-183
⚠Q1908	⚠CMF R 47Ω½W +1%	QRV122F-470Z
⚠R1909	V R 2KΩ	QVP5A0B-023E
R1910	⚠CMF R 2.74KΩ¼W +1%	QRV142F-274I
⚠FR1901	⚠F R 220Ω½W K	QRH124K-221M

Capacitors Symbol	Description	Part Number
C1301	BPE Cap. 3.3uF 50V A	QEN61HA-335Z
C1402	Tan. Cap. 2.2uF 16V K	QEE51CK-225B
C1407	E Cap. 4.7uF 6.3V A	QEW51JA-475
C1411	E Cap. 100uF 160V A	QEW52CA-107
C1412	E Cap. 3.3uF 160V A	QEW52CA-335
C1508	PP Cap. 5600uF 50V J	QFP31HJ-562
⚠C1512	⚠PP Cap. 2000pF DC1500V J	QFZ0082-202
⚠C1513	⚠PP Cap. 2000pF DC1500V J	QFZ0082-202
⚠C1514	⚠PP Cap. 2000pF DC1500V J	QFZ0082-202
C1515	PP Cap. 0.53uF DC1200V J	QFZ0067-534
C1520	BPE Cap. 3.3uF 50V A	QEN61HA-335Z
C1523	E Cap. 1uF 160V A	QEW62CA-105Z
C1524	M Cap. 0.1uF 200V K	QFM720K-104M
⚠C1531	⚠PP Cap. 2000pF DC1500V J	QFZ0082-202
⚠C1532	⚠PP Cap. 1500pF DC1500V J	QFZ0082-152
C1904	E Cap.	QEY0034-001
C1905	E Cap. 10uF 250V A	QEW52EA-106

Coils

Symbol	Description	Part Number
L1502	Linarity Coil	A39835
L1503	Width Coil	C30380-A
L1504	Heater Choke	C30445-A

Transformers

Symbol	Description	Part Number
T1501	Hor. Drive Transf.	A46022-BM
T1503	Side Pin Transf.	C39050-A

Semiconductors

Symbol	Description	Part Number
IC1501	IC	HA11244
X1101	Si. Transistor	2SC1685(R)
X1102	Si. Transistor	2SA673(C)
X1103	Si. Transistor	2SC1685(R)
X1104	Si. Transistor	2SA673(C)
X1105	Si. Transistor	2SC1685(R)
X1106	Si. Transistor	2SA673(C)
X1301	Si. Transistor	2SC1685(R)
X1302	Si. Transistor	2SC1685(R)
X1303	Si. Transistor	2SA673(C)
X1304	Si. Transistor	2SC1685(R)
X1305	Si. Transistor	2SC1685(R)
X1401	Si. Transistor	2SD478
X1402	Si. Transistor	2SD478
X1501	Si. Transistor	2SC2610BK
X1901	Si. Transistor	2SC2688 (K.L.M.)
X1902	Si. Transistor	2SC1890A (E.F.)
D1101	Si. Diode	W06A
D1102	Si. Diode	W06A
D1103	Si. Diode	W06A
D1301	Si. Diode	1SZ473H
D1401	Si. Diode	1SZ473H
D1402	Zener Diode	RD10F(C)
D1503	Si. Diode	HF-1
D1504	Si. Diode	V09E
D1505	Zener Diode	RD11E(B)
D1506	Si. Diode	W06A
D1507	Si. Diode	1SS81
D1508	Si. Diode	1SZ473H
⚠D1701	⚠Zener Diode	RD20EV2
⚠D1901	⚠Si. Diode	1S1887A
⚠D1902	⚠Si. Diode	1S1887A
⚠D1903	⚠Si. Diode	1S1887A
⚠D1904	⚠Si. Diode	1S1887A
⚠D1905	⚠Zener Diode	RD6.8EV3

Miscellaneous

Symbol	Description	Part Number
⚠F1901	⚠Fuse 1.25A	QMF53U1-1R25S
⚠F1902	⚠UL Fuse 3A	QMF66U1-3R0S

REPLACEMENT PARTS LIST - ELECTROHOME 13'' MONITOR

Components identified by the ⚠ symbol in the PARTS LIST and on the Schematic have special characteristics important to safety.

DO NOT degrade the safety of the set through improper servicing.

Abbreviations for Resistors and Capacitors

Resistor

C R	:	Carbon Resistor
Comp. R	:	Composition Resistor
OM R	:	Oxide Metal Film Resistor
V R	:	Variable Resistor
MF R	:	Metal Film Resistor
CMF R	:	Coating Metal Film Resistor
UNF R	:	Nonflammable Resistor
F R	:	Fusible Resistor

Capacitor

C Cap.	:	Ceramic Capacitor
M Cap	:	Mylar Capacitor
E Cap.	:	Electrolytic Capacitor
BP E Cap.	:	Bi-Polar (or Non-Polar) Electrolytic Capacitor
MM Cap.	:	Metalized Mylar Capacitor
PP Cap.	:	Polypropylene Capacitor
MPP Cap.	:	Metalized PP Capacitor
PS Cap	:	Polystyrol Capacitor
Tan. Cap.	:	Tantal Capacitor

NOTE: When ordering replacement parts please specify the part number as shown in this list including part name, and model number. Complete information will help expedite the order.

Use of substitute replacement parts which do not have the same safety characteristics as specified, may create shock, fire or other hazards. For maximum reliability and performance, all parts should be replaced by those having identical specifications.

Symbol	Description	Part Number
	Main P.C.B. Ass'y	SU-1103A
	CRT Socket P.C.B. Ass'y	SU-3016A

Outside of the P.C.B. Ass'y

Symbol	Description	Part Number
⚠V01	⚠Picture Tube	370ESB22(E)
⚠DY01	⚠Deflection Yoke	C29123-V
	PC Magnet	A76366-A
	Wedge	C30006
	⚠Flyback Transf.	A19183-A
⚠R11	⚠Focus V R	A46606-A
⚠R05	UNF Resistor 220Ω, 25W. K	QRF258K-221
⚠C04	⚠C Capacitor 150 pF, AC1.5KV	QCZ0101-005
X01	Si. Transistor	2SD869
IC01	IC Regulator	STR383
L01	Degausing Coil	21-1007-31
	Degausing Coil Pin Terminal (2)	34-708-01
	Degausing Coil Pin Terminal Housing	34-709-01
	Groundstrap Ass'y.	34-697-04
	Groundstrap Wire Terminal	34-228-03
	Groundstrap Spring (2)	35-3560-01
BR	Support Bracket RH	35-3919-01
BR	Support Bracket LH	35-3919-02
SC	SCREW 10-½ Pix Tube Mtg. (4)	31-631018-08
WA	Pyramidal Lockwasher (4)	33-255-01
	Clip P.C.B. Support (2)	33-629-02
	Ground Lug	34-33-04
CH	Chassis Base	38-452-01

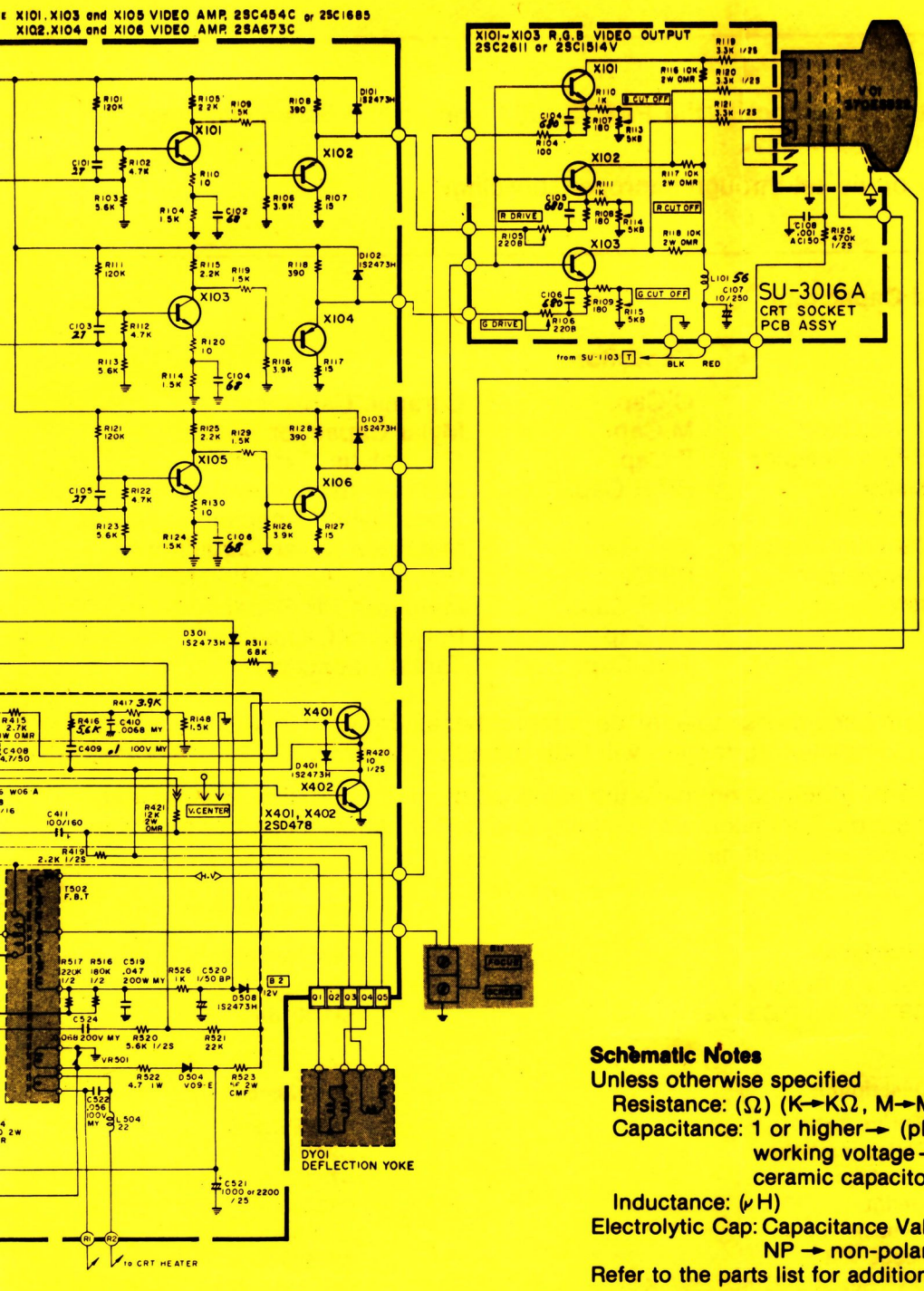

Schematic Notes

Unless otherwise specified

Resistance: (Ω) (K→KΩ, M→MΩ), 1/4 (W) carbon resistor

Capacitance: 1 or higher→ (pF), less than 1→ (μF)
working voltage→ 50 (V)
ceramic capacitor

Inductance: (μH)

Electrolytic Cap: Capacitance Value (μF)/working voltage (V),
NP → non-polar (or bipolar) electrolytic cap.

Refer to the parts list for additional component information.

⊙ indicates test point connection

⏚ indicates chassis ground unless otherwise specified

Hz indicates cycles per second

For **safety** purposes (and continuing reliability)

⚠ replace all components marked with safety symbol with identical type.
NOTE: FR → fusible resistor

Parts identification on circuit boards:
e.g. SU1126A (R107 = R1107)
SU3030A (R113 = R3113)

G07-FBO
00-4147-03

Main P.C.B. Ass'y (SU-1103A) Parts List

Resistors

Symbol	Description	Part Number
R1406	V R 200Ω	QVZ3230-022
R1408	V R 200Ω	QVZ3230-022
R1410	CMF R 6.8Ω1W J	QRX019J-6R8
R1414	OM R 3.3KΩ1W J	QRG019J-332
R1415	OM R 2.7KΩ1W J	QRG019J-272
R1421	OM R 12KΩ2W J	QRG029J-123
R1422	V R 10KΩ	QVZ3224-014H
⚠FR1401	⚠F R 68Ω2W K	QRH024K-680M
⚠R1503	⚠CMF R 11.8KΩ¼W +1%	QRV142F-1182
R1504	V R 5KΩ	QVZ3230-053
R1509	OM R 10KΩ2W J	QRG029J-103
R1511	OM R 5.6KΩ2W J	QRG029J-562
R1514	OM R 680Ω2W J	QRG029J-681
R1515	CMF R 8.2Ω1W J	QRX019J-8R2
R1522	CMF R 4.7Ω1W J	QRX019J-4R7
R1523	OM R 56Ω2W J	ORG029J-560
R1528	OM R 390Ω1W J	ORG019J-391
R1534	ZN R	ERZ-C05ZK471
VR1501	ZN R	ERZ-C05DK271
⚠R1703	⚠CMF R 39KΩ½W +1%	QRV122F-3902
⚠R1704	⚠CMF R 7.68KΩ¼W +1%	QRV142F-7681
⚠R1901	⚠Posistor	A75414
R1902	UNF R 2Ω7W K	QRF076K-2R0
R1903	CMF R 5.6Ω3W J	QRX039J-5R6
R1904	OM R 10KΩ2W J	QRG026J-103Z
⚠FR1901	⚠F R 220Ω½W K	QRH124K-221M

Capacitors

Symbol	Description	Part Number
C1402	Tan. Cap. 2.2uF 16V K	QEE51CK-225B
C1411	E Cap. 100uF 160V A	QEW52CA-107
C1412	E Cap. 3.3uF 160V A	QEW52CA-335
C1508	PP Cap. 5600pF 50V J	QFP31HJ-562
C1511	E Cap. 47uF 160V A	QEW52CA-476S
⚠C1512	⚠PP Cap. 2000pF DC1500V J	QFZ0082-202
⚠C1513	⚠PP Cap. 2000pF DC1500V J	QFZ0082-202
⚠C1514	⚠PP Cap. 2500pF DC1500V J	QFZ0082-252
C1515	PP Cap. 0.53uF DC1200V K	QFZ0067-534
C1520	BPE Cap. 1uF 50V A	QEN61HA-105Z
C1524	M Cap. 0.1uF 200V K	QFM72DK-682M
C1904	E Cap.	QEY0034-001
C1905	E Cap. 10uF 250V A	QEW52EA-106
⚠C1907	⚠MM Cap. 0.1uF AC150V Z	QFZ9008-104

Coils

Symbol	Description	Part Number
L1501	Peaking Coil	A75360-6
L1502	Liniarty Coil	A39934
L1503	Width Coil	C30380-A
L1504	Heater Choke	C30333-A
L1901	Line Filter	A39475-J

Transformers

Symbol	Description	Part Number
T1501	Hor. Drive Transf.	A46022-BM
T1503	Side Pin Transf.	C39050-A

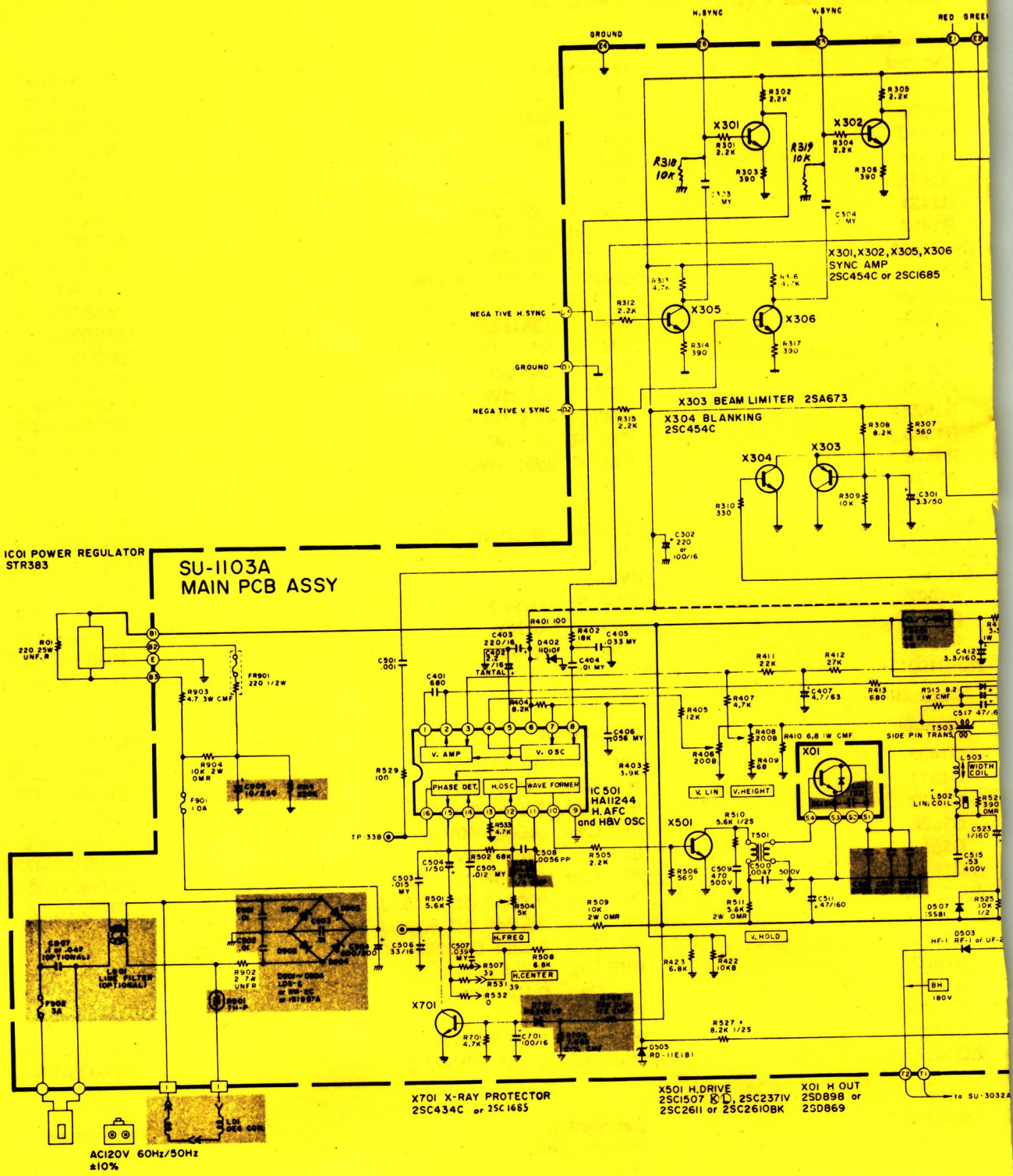
SU-1103A
MAIN PCB ASSY
IC01 POWER REGULATOR
STR383
H.SYNC
V.SYNC
GROUND
X301,X302,X305,X306
SYNC AMP
2SC454C or 2SC1685
X303 BEAM LIMITER 2SA673
X304 BLANKING
2SC454C
NEGA TIVE H.SYNC
NEGA TIVE V.SYNC
IC501
HA11244
H.AFC
and H&V OSC
V. AMP
V. OSC
PHASE DET.
H.OSC
WAVE FORMER
H.FREQ
H.CENTER
V. HOLD
V. LIN
V. HEIGHT
X501
X701
X01
SIDE PIN TRANS.
X701 X-RAY PROTECTOR
2SC434C or 2SC1685
X501 H.DRIVE
2SC1507 KD, 2SC2371V
2SC2611 or 2SC2610BK
X01 H OUT
2SD898 or
2SD869
AC120V 60Hz/50Hz
±10%

Semiconductors Symbol	Description	Part Number
IC1501	I.C.	HA11244
X1101	Si. Transistor	2SC1685(R)
X1102	Si. Transistor	2SA673(C)
X1103	Si. Transistor	2SC1685(R)
X1104	Si. Transistor	2SA673(C)
X1105	Si. Transistor	2SC1685(R)
X1106	Si. Transistor	2SA673(C)
X1301	Si. Transistor	2SC1685(R)
X1302	Si. Transistor	2SC1685(R)
X1303	Si. Transistor	2SA673(C)
X1304	Si. Transistor	2SC1685(R)
X1305	Si. Transistor	2SC1685(R)
X1401	Si. Transistor	2SD478
X1402	Si. Transistor	2SD478
X1501	Si. Transistor	2SC2610BK
X1701	Si. Transistor	2SC1685(P-S)
D1101	Si. Diode	W06A
D1102	Si. Diode	W06A
D1103	Si. Diode	W06A
D1301	Si. Diode	1S2473H
D1401	Si. Diode	1S2473H
D1402	Zener Diode	RD10F(C)
D1503	Si. Diode	HF-1
D1504	Si. Diode	V09E
D1505	Zener Diode	RD11E(B)
D1506	Si. Diode	W06A
D1507	Si. Diode	1SS81
D1508	Si. Diode	1S2473H
⚠D1701	⚠Zener Diode	RD20EV2
⚠D1901	⚠Si. Diode	1S1887A
⚠D1902	⚠Si. Diode	1S1887A
⚠D1903	⚠Si. Diode	1S1887A
⚠D1904	⚠Si. Diode	1S1887A

Miscellaneous Symbol	Description	Part Number
⚠F1901	⚠Fuse 1A	QMF53U1-1R0S
⚠F1902	⚠UL Fuse 3A	QMF66U1-3R0S

CRT Socket P.C.B. Ass'y (SU-3016A) Parts List

Resistors

Symbol	Description	Part Number
R3105	V R 200Ω	QVZ3234-022
R3106	V R 200Ω	QVZ3234-022
R3113	V R 5KΩ	QVZ3234-053
R3114	V R 5KΩ	QVZ3234-053
R3115	V R 5KΩ	QVZ3234-053
R3116	OM R 10KΩ2W J	QRG029J-103
R3117	OM R 10KΩ2W J	QRG029J-103
R3118	OM R 10KΩ2W J	QRG029J-103
R3119	Comp. R 3.3KΩ½W K	QRZ0039-332
R3120	Comp. R 3.3KΩ½W K	QRZ0039-332
R3121	Comp. R 3.3KΩ½W K	QRZ0039-332

Capacitors

Symbol	Description	Part Number
C3107	E Cap. 10uF 250V A	QEW52EA-106
C3108	C Cap. 1000pF DC1400V P	QCZ9001-102M

Coils

Symbol	Description	Part Number
L3101	Peaking coil	QQL043K-101

Semiconductors

Symbol	Description	Part Number
X3101	Si. Transistor	2SC2611
X3102	Si. Transistor	2SC2611
X3103	Si. Transistor	2SC2611

Miscellaneous

Symbol	Description	Part Number
⚠	⚠ CRT Socket	A75522

VII Schematics and Wiring Diagrams

REVISION	DATE	NAME
CREDIT MULT & FLUORESCENT LIGHT	12/7/81	V. CAPORUSSO

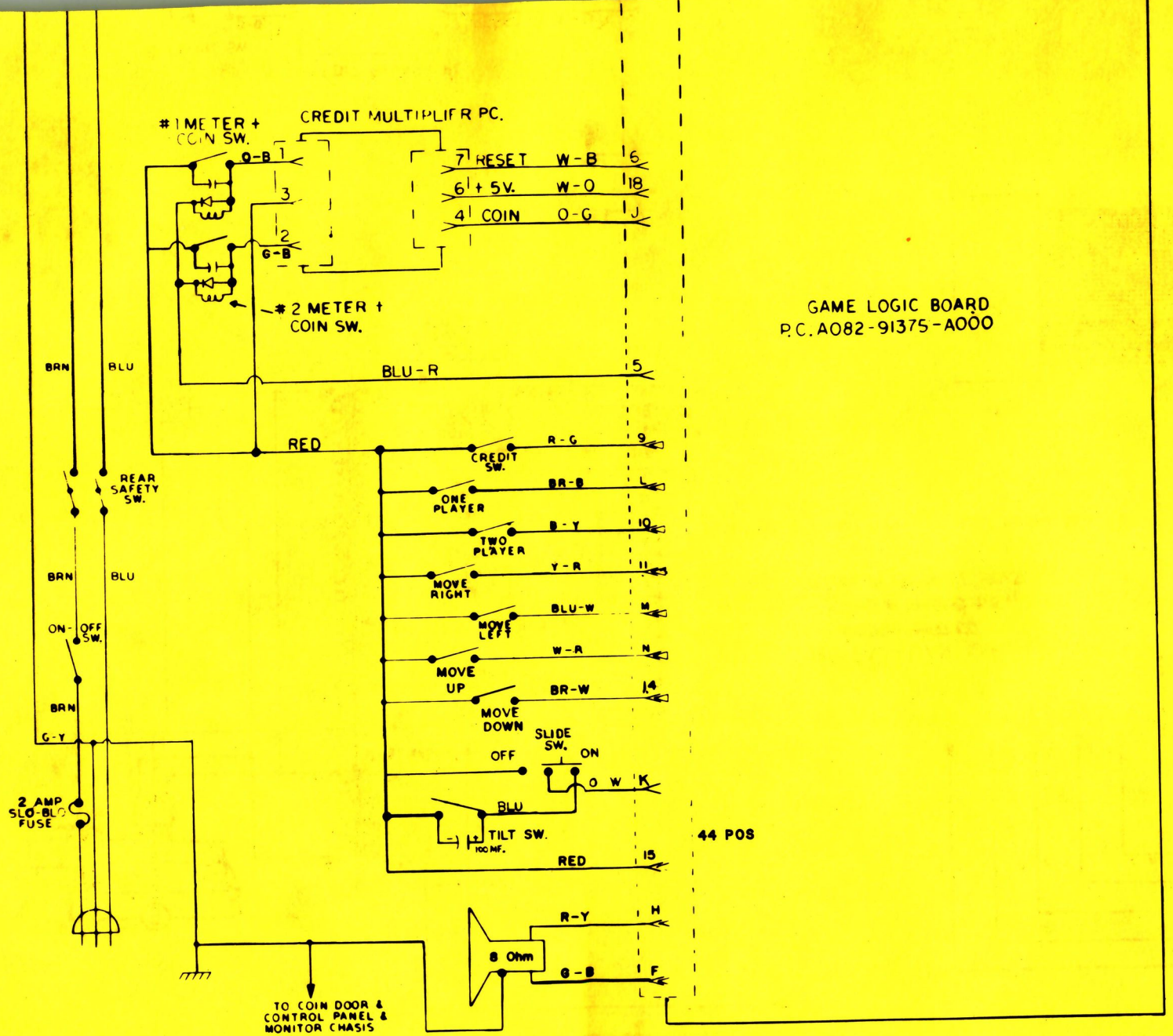

GAME LOGIC BOARD
P.C. A082-91375-A000

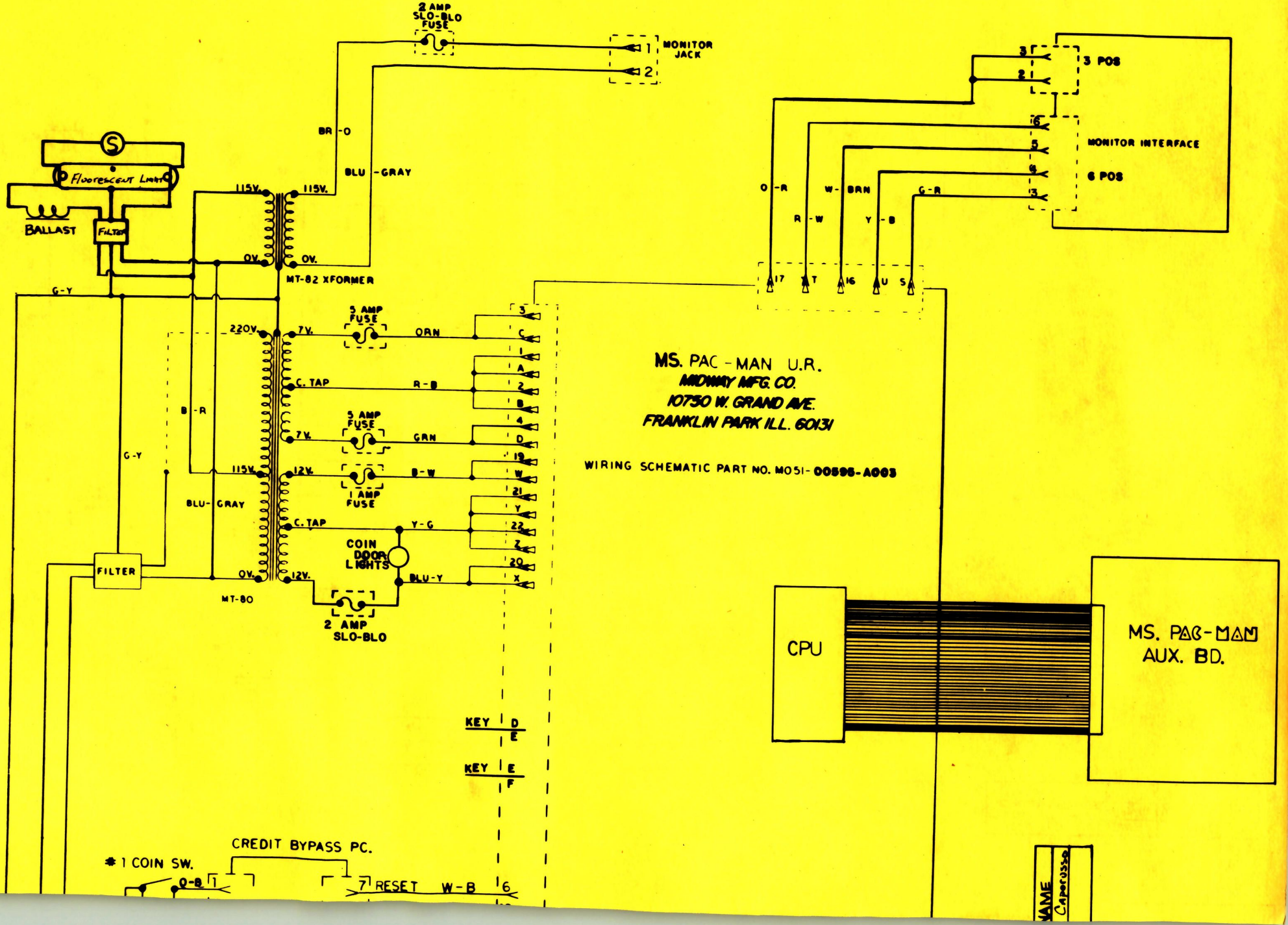
2 AMP SLO-BLO FUSE
MONITOR JACK
1
2
BR-O
BLU-GRAY
FLOURESCENT LAMP
BALLAST
FILTER
115V.
115V.
0V.
0V.
MT-82 XFORMER
G-Y
220V.
7V.
5 AMP FUSE
ORN
C. TAP
R-B
B-R
5 AMP FUSE
7V.
GRN
G-Y
115V.
12V.
B-W
1 AMP FUSE
BLU-GRAY
C. TAP
Y-G
COIN DOOR LIGHTS
FILTER
0V.
12V.
BLU-Y
MT-80
2 AMP SLO-BLO
3 POS
6 POS
MONITOR INTERFACE
O-R
W-BRN
G-R
R-W
Y-B
17
T
16
U
S
MS. PAC-MAN U.R.
MIDWAY MFG. CO.
10750 W. GRAND AVE.
FRANKLIN PARK ILL. 60131
WIRING SCHEMATIC PART NO. M051-00596-A003
CPU
MS. PAC-MAN AUX. BD.
KEY D
E
KEY E
F
CREDIT BYPASS PC.
#1 COIN SW.
O-B
7
RESET
W-B
6

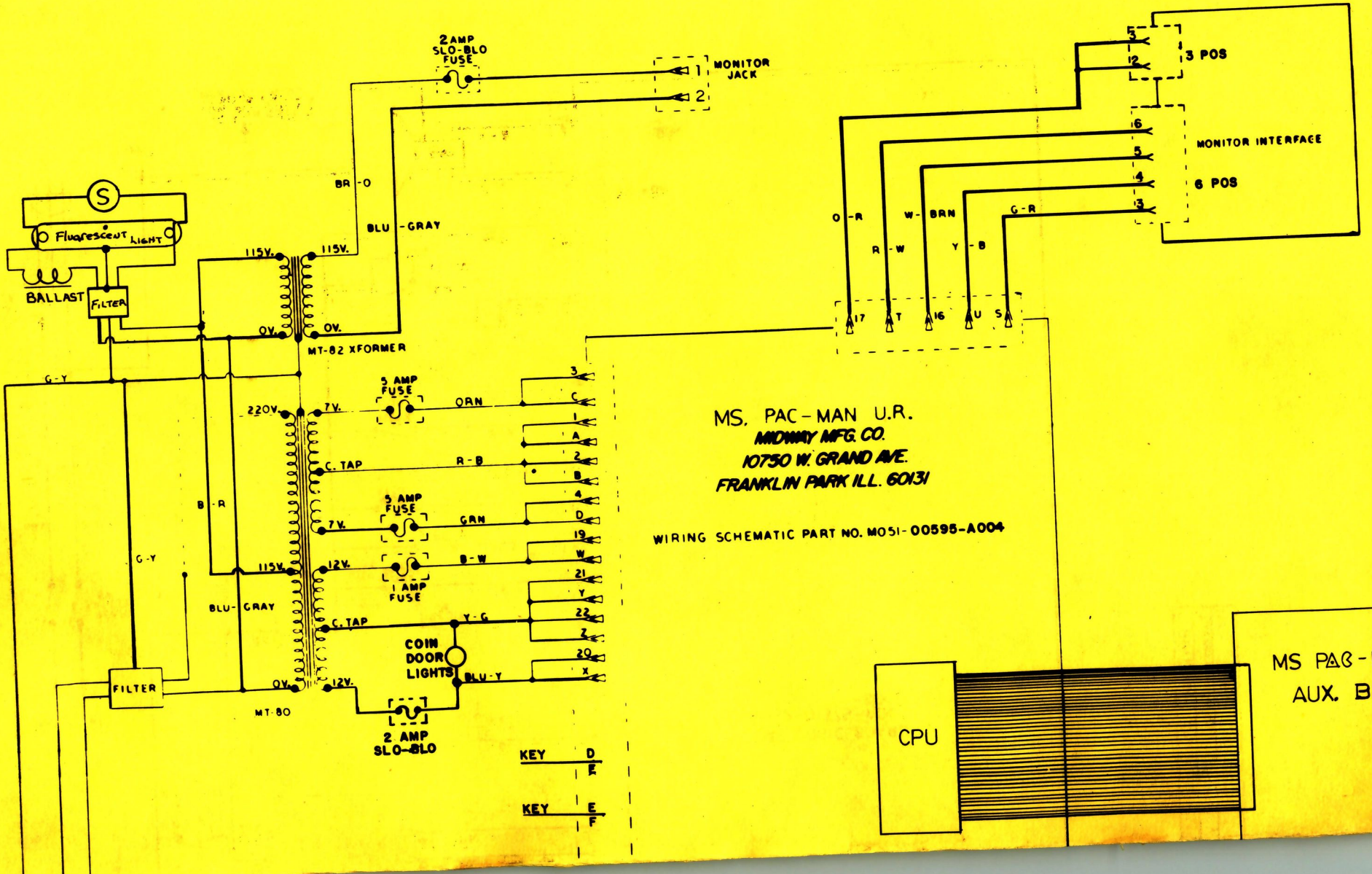
2 AMP SLO-BLO FUSE
MONITOR JACK
1
2
BR-O
BLU-GRAY
S
FLUORESCENT LIGHT
BALLAST
FILTER
115V.
115V.
0V.
0V.
MT-82 XFORMER
G-Y
220V.
7V.
5 AMP FUSE
ORN
3
C
1
A
C. TAP
R-B
2
B
B-R
7V.
5 AMP FUSE
GRN
4
D
115V.
12V.
B-W
19
W
1 AMP FUSE
21
Y
BLU-GRAY
C. TAP
Y-G
22
Z
COIN DOOR LIGHTS
20
X
BLU-Y
FILTER
0V.
12V.
MT-80
2 AMP SLO-BLO
KEY D E
KEY E F
5
3
3 POS
6
5
4
MONITOR INTERFACE
6 POS
3
O-R
R-W
W-BRN
Y-B
G-R
17
T
16
U
S
MS. PAC-MAN U.R.
MIDWAY MFG. CO.
10750 W. GRAND AVE.
FRANKLIN PARK ILL. 60131
WIRING SCHEMATIC PART NO. M051-00595-A004
CPU
MS PAC-MAN
AUX. BD.

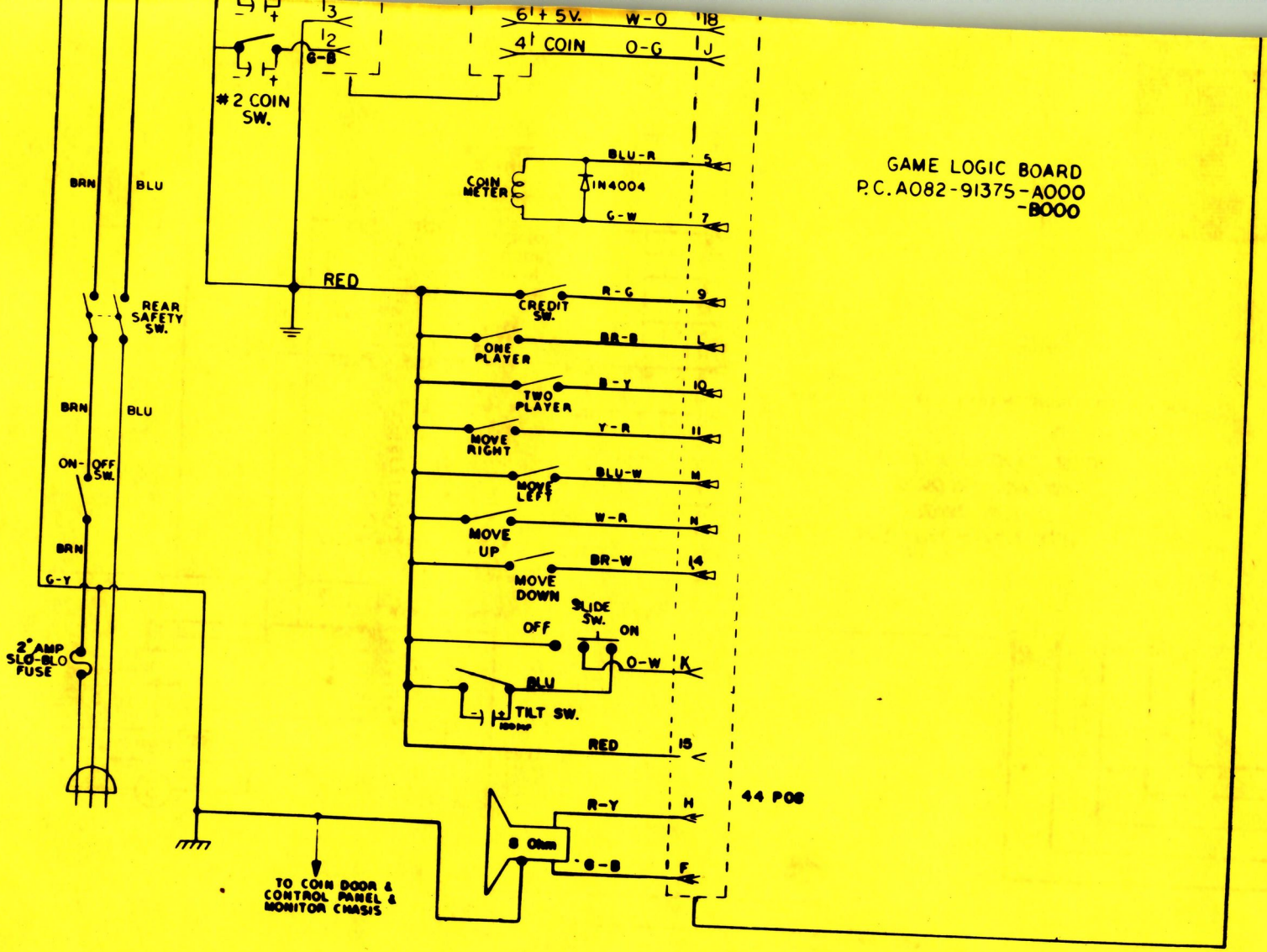

REVISION	DATE	
Fluorescent Lights	12/7/81	Y.

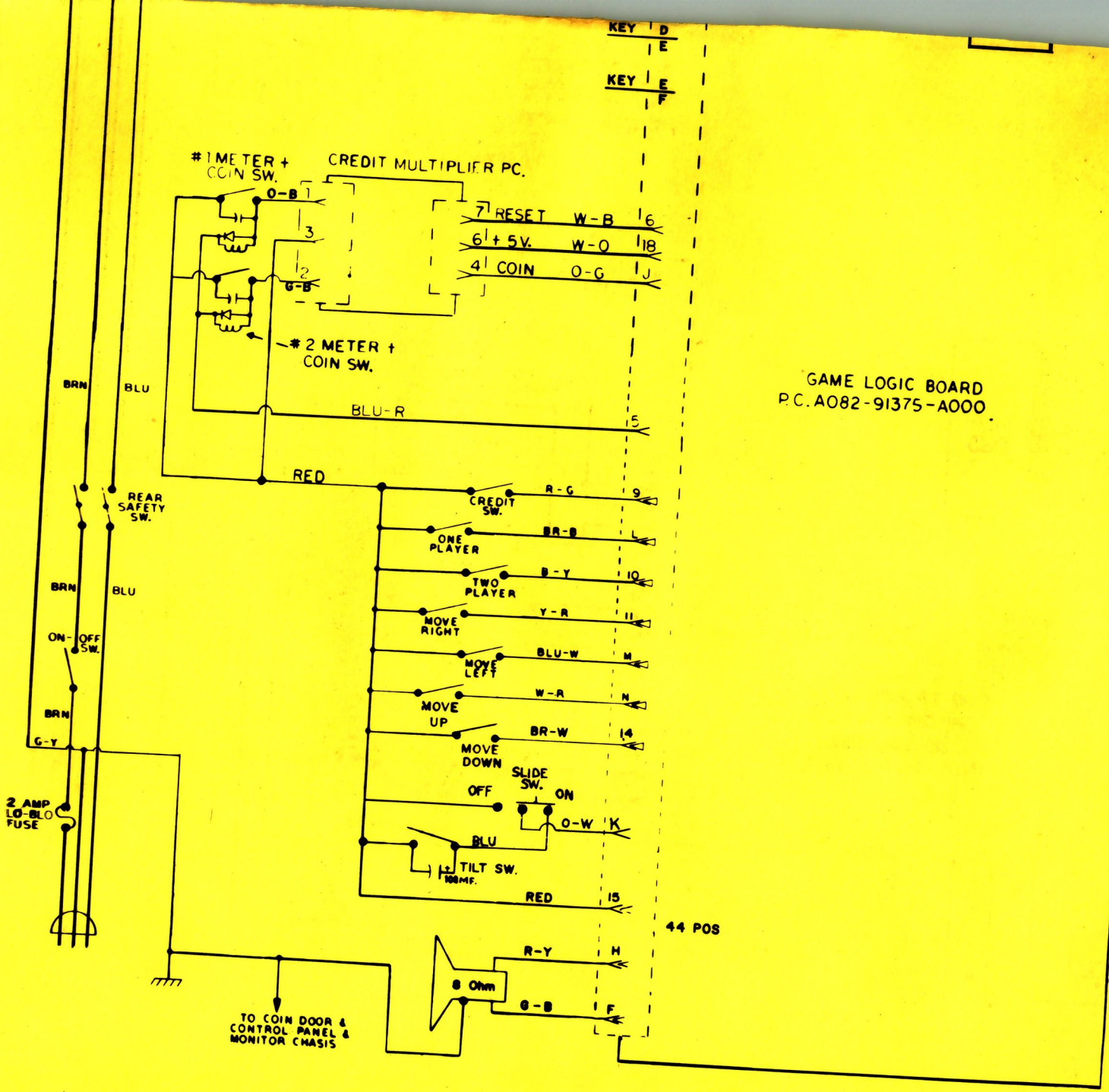

REVISION	DATE	NAME
NONE	12/14/81	V. CAPOROSSO

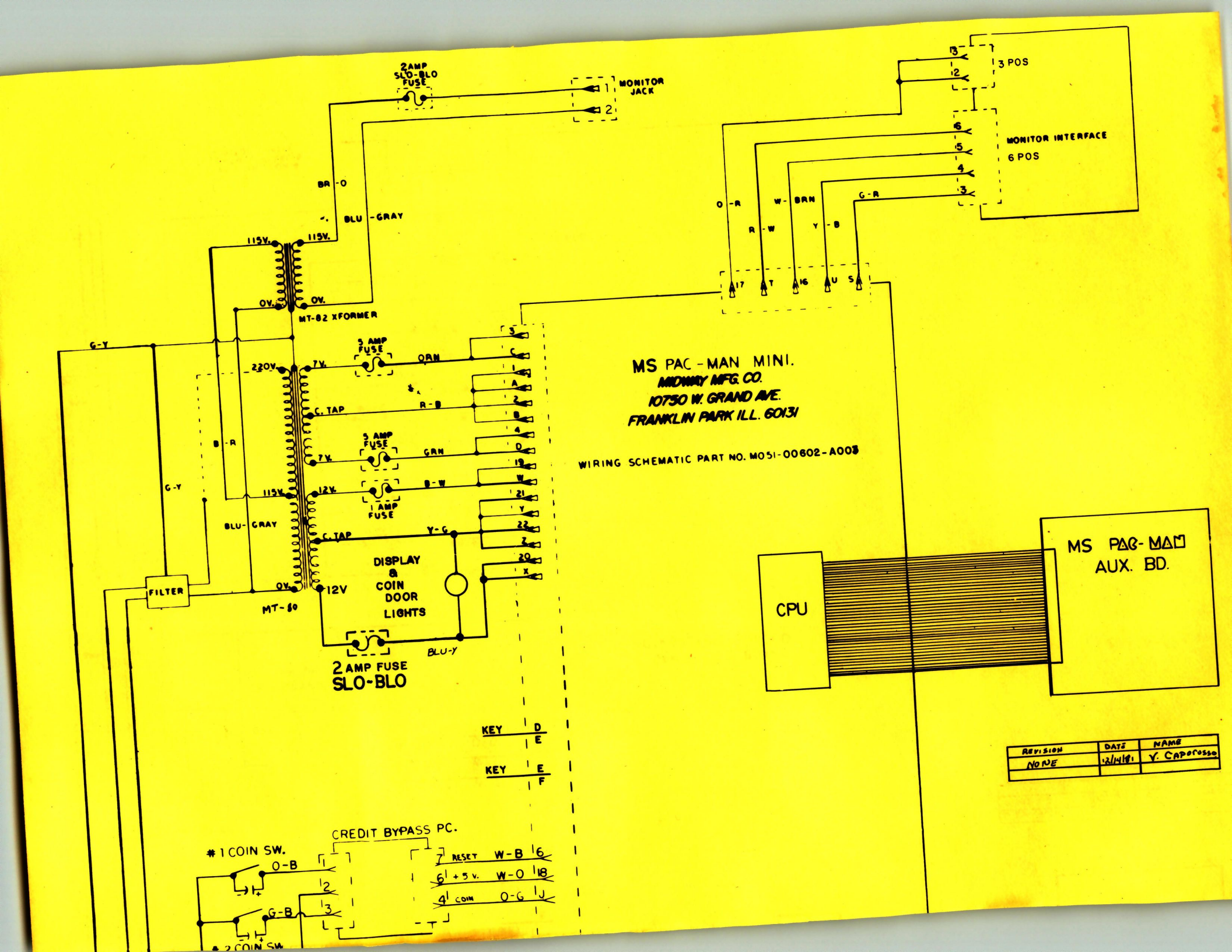

2AMP SLO-BLO FUSE
MONITOR JACK
3 POS
MONITOR INTERFACE 6 POS
BR-O
BLU-GRAY
115V.
115V.
0V.
0V.
MT-82 XFORMER
G-Y
220V.
7V.
5 AMP FUSE
ORN
C. TAP
R-B
5 AMP FUSE
GRN
7V.
B-R
115V.
12V.
B-W
1 AMP FUSE
BLU-GRAY
C. TAP
Y-G
DISPLAY & COIN DOOR LIGHTS
FILTER
0V.
12V
MT-80
BLU-Y
2 AMP FUSE SLO-BLO
O-R
R-W
W-BRN
Y-B
G-R
MS PAC-MAN MINI.
MIDWAY MFG. CO.
10750 W. GRAND AVE.
FRANKLIN PARK ILL. 60131
WIRING SCHEMATIC PART NO. M051-00602-A003
CPU
MS PAC-MAN AUX. BD.
KEY D E
KEY E F
CREDIT BYPASS PC.
#1 COIN SW.
O-B
G-B
#2 COIN SW.
RESET W-B
+5 V. W-O
COIN O-G
REVISION NONE
DATE 12/14/81
NAME V. CAPOROSSO

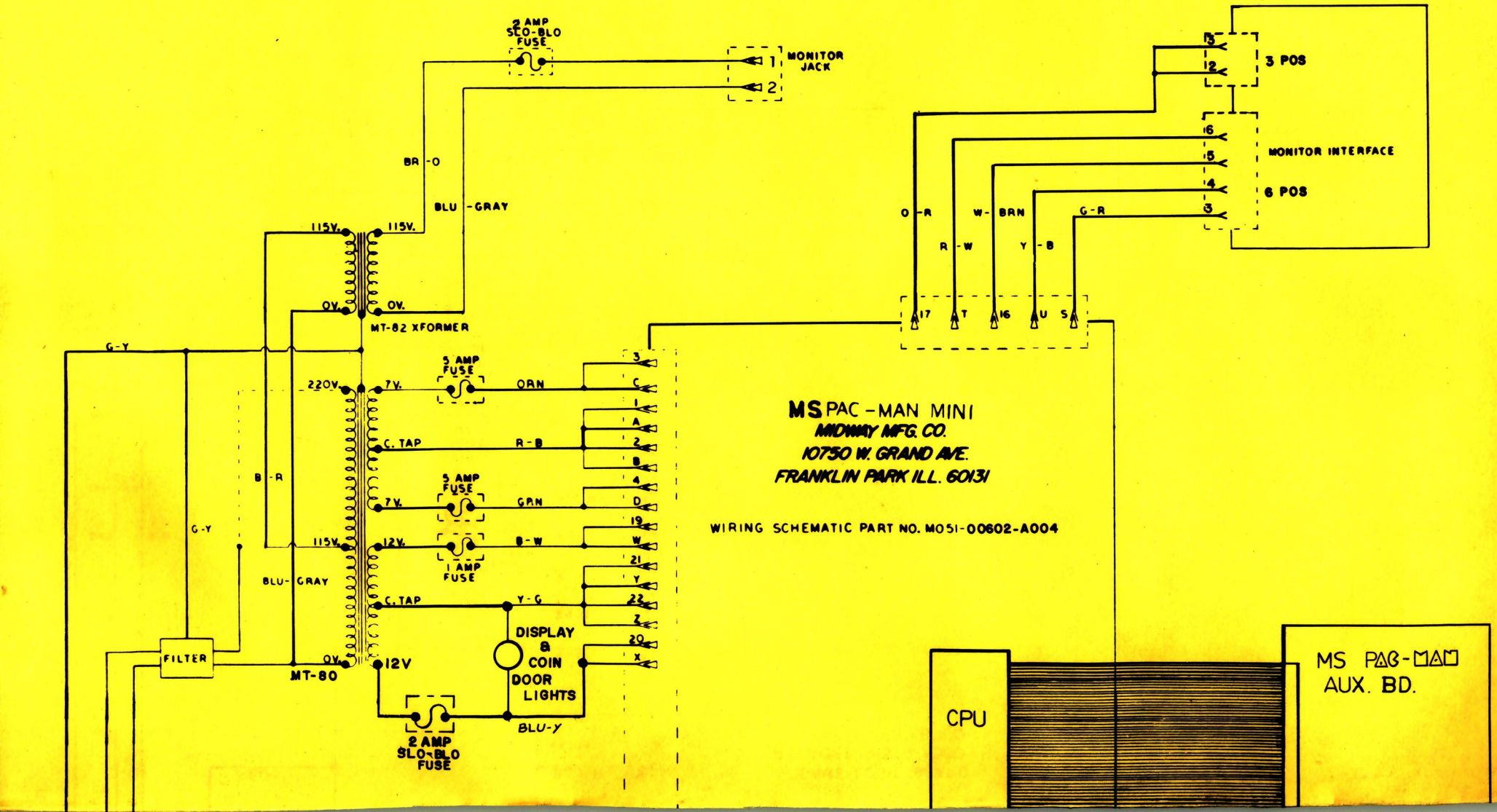
2 AMP SLO-BLO FUSE
MONITOR JACK
1
2
BR-O
BLU-GRAY
115V.
115V.
0V.
0V.
MT-82 XFORMER
G-Y
220V.
7V.
5 AMP FUSE
ORN
C. TAP
R-B
B-R
5 AMP FUSE
7V.
GRN
115V.
12V.
B-W
1 AMP FUSE
BLU-GRAY
C. TAP
Y-G
G-Y
FILTER
0V.
MT-80
12V
DISPLAY & COIN DOOR LIGHTS
BLU-Y
2 AMP SLO-BLO FUSE
3 POS
MONITOR INTERFACE
6 POS
O-R
R-W
W-BRN
Y-B
G-R
17
T
16
U
S
MS PAC-MAN MINI
MIDWAY MFG. CO.
10750 W. GRAND AVE.
FRANKLIN PARK ILL. 60131
WIRING SCHEMATIC PART NO. MO51-00602-A004
CPU
MS PAC-MAN AUX. BD.

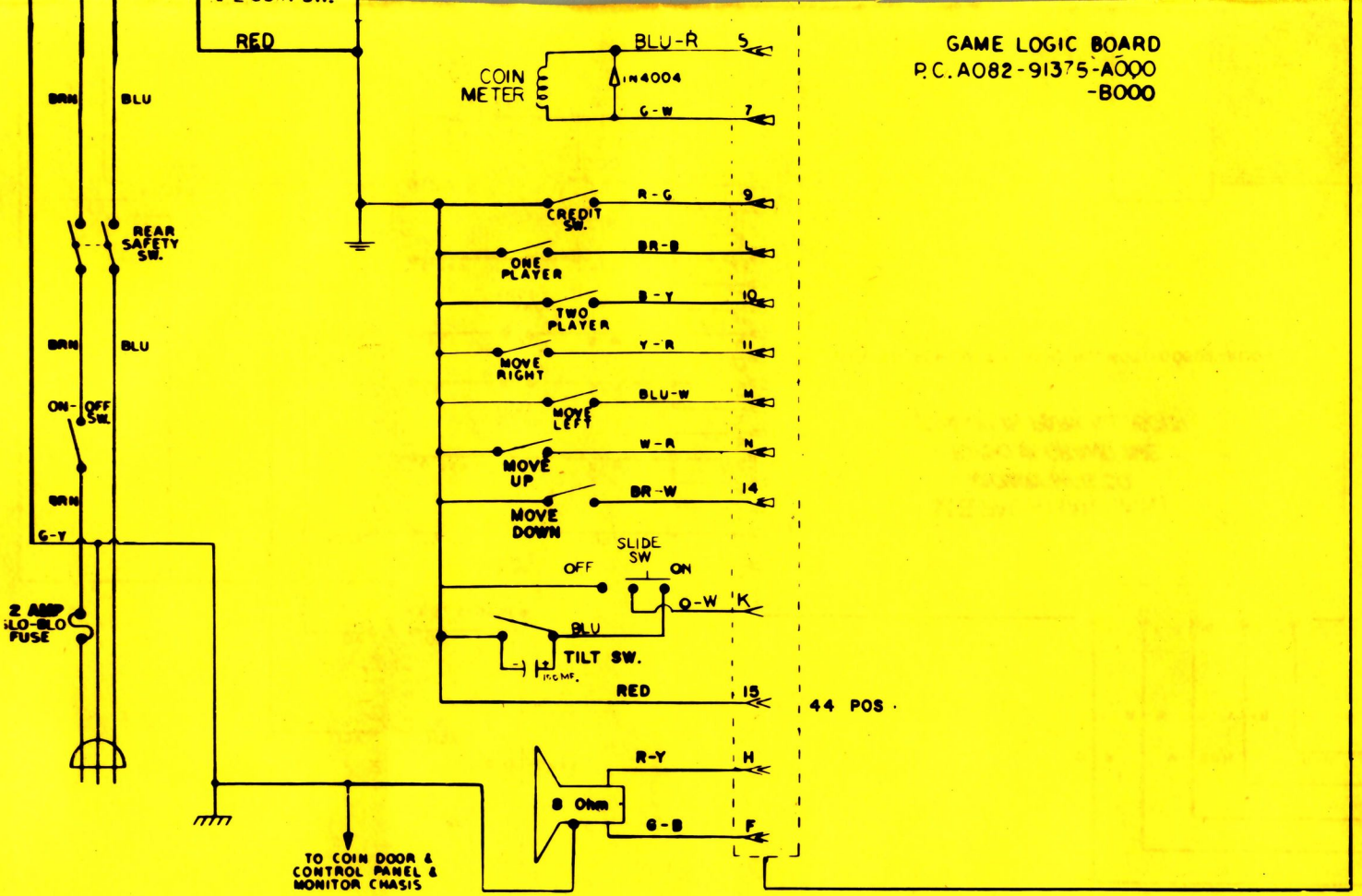
RED
BRN
BLU
REAR SAFETY SW.
BRN
BLU
ON-OFF SW.
BRN
G-Y
2 AMP SLO-BLO FUSE
COIN METER
BLU-R
5
1N4004
G-W
7
CREDIT SW.
R-G
9
ONE PLAYER
BR-B
L
TWO PLAYER
B-Y
10
MOVE RIGHT
Y-R
11
MOVE LEFT
BLU-W
M
MOVE UP
W-R
N
MOVE DOWN
BR-W
14
SLIDE SW
OFF
ON
O-W
K
BLU
TILT SW.
RED
15
44 POS.
R-Y
H
8 Ohm
G-B
F
TO COIN DOOR & CONTROL PANEL & MONITOR CHASIS
GAME LOGIC BOARD
P.C.A082-91375-A000
-B000

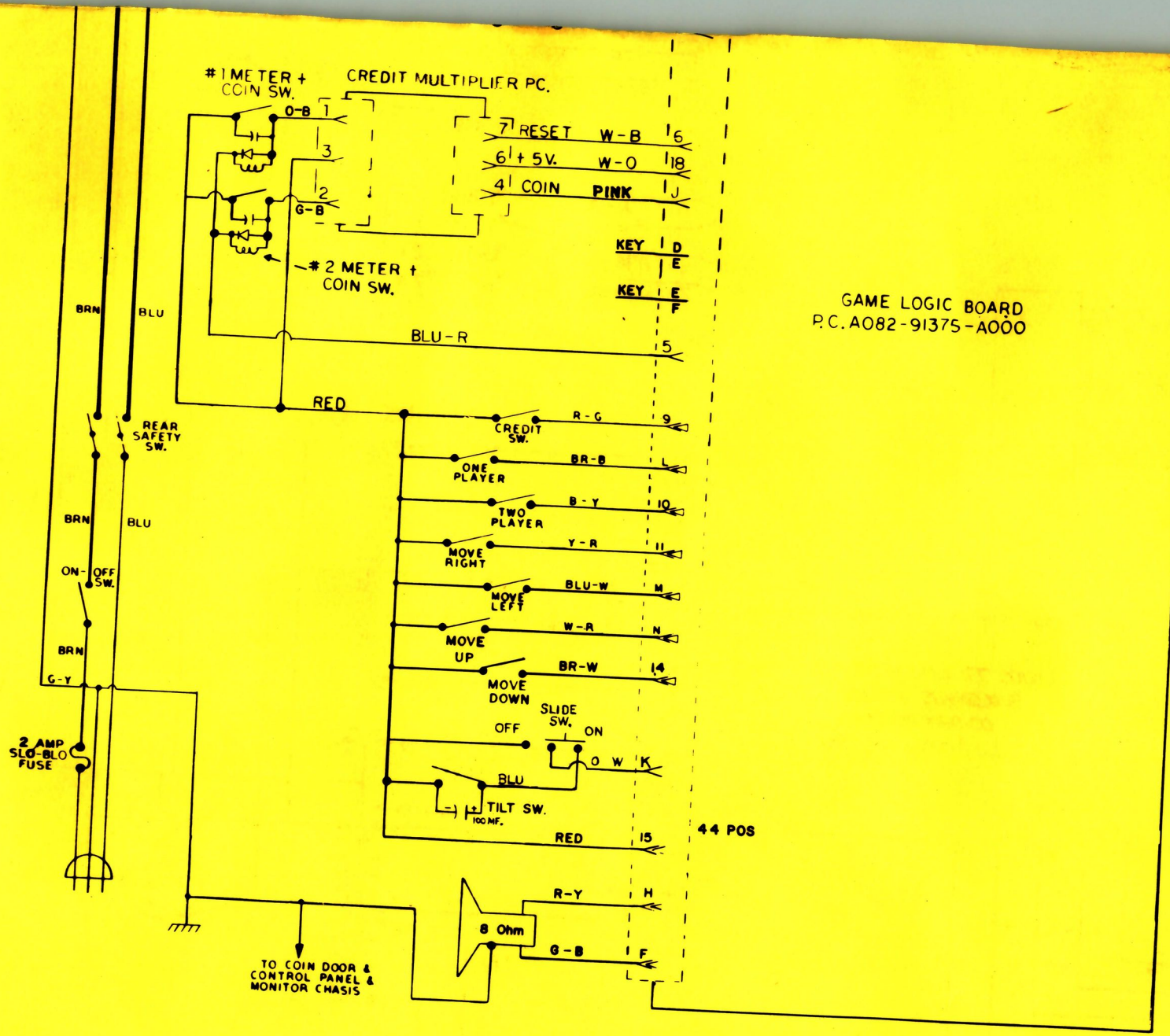

REVISION	NAME	
NONE	V. Caporosso	12/1/81

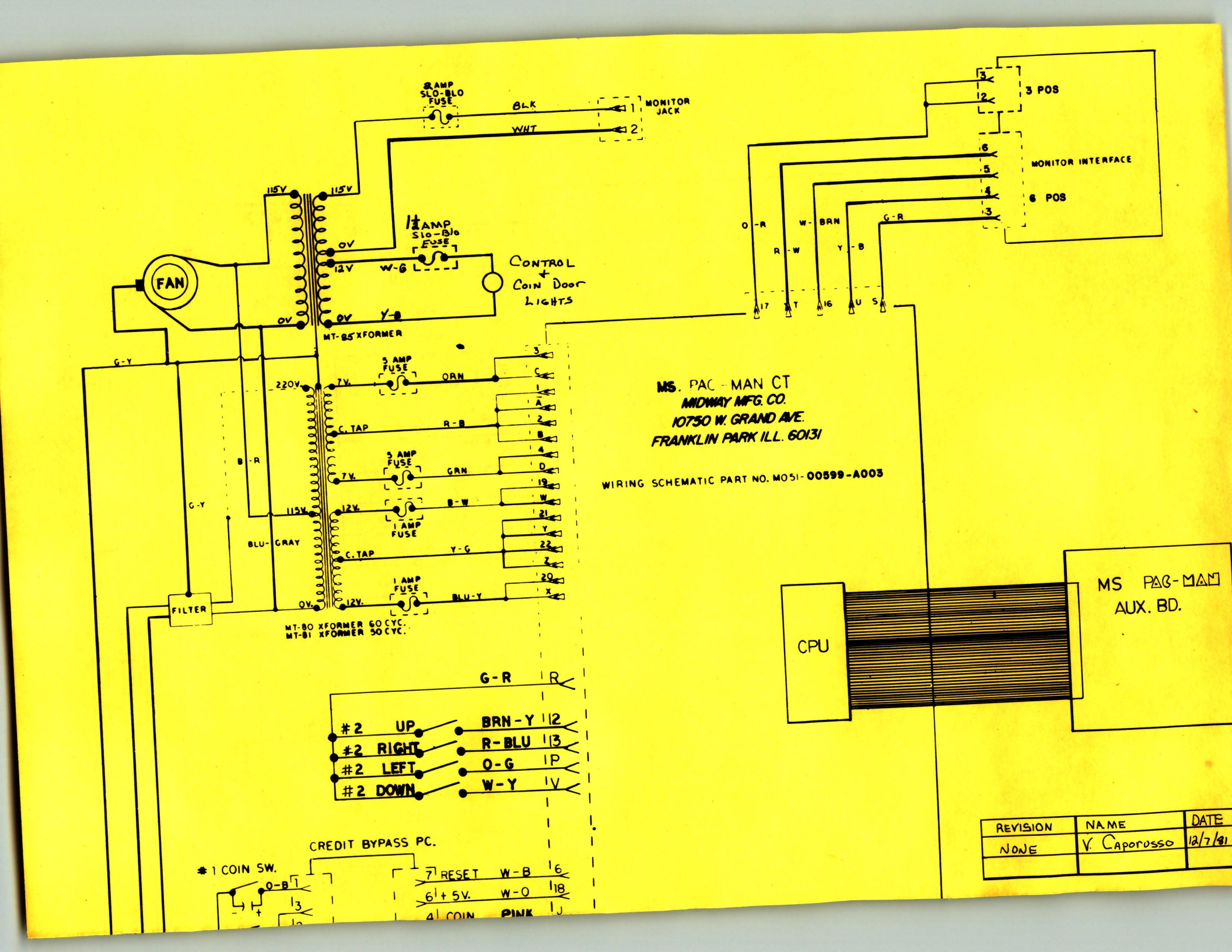
8 AMP SLO-BLO FUSE
BLK
WHT
MONITOR JACK
1
2
115V
115V
1/2 AMP SLO-BLO FUSE
0V
12V
W-G
CONTROL + COIN DOOR LIGHTS
FAN
0V
0V
Y-B
MT-85 XFORMER
G-Y
220V
7V.
3 AMP FUSE
ORN
C. TAP
R-B
7V.
3 AMP FUSE
GRN
B-R
12V.
B-W
1 AMP FUSE
115V.
G-Y
BLU-GRAY
C. TAP
Y-G
1 AMP FUSE
FILTER
0V.
12V.
BLU-Y
MT-80 XFORMER 60 CYC.
MT-81 XFORMER 50 CYC.
3 POS
MONITOR INTERFACE
6 POS
O-R
R-W
W-BRN
Y-B
G-R
17
T
16
U
S
MS. PAC-MAN CT
MIDWAY MFG. CO.
10750 W. GRAND AVE.
FRANKLIN PARK ILL. 60131
WIRING SCHEMATIC PART NO. MO51-00599-A003
CPU
MS PAC-MAN AUX. BD.
G-R
R
#2 UP
BRN-Y
12
#2 RIGHT
R-BLU
13
#2 LEFT
O-G
P
#2 DOWN
W-Y
V
CREDIT BYPASS PC.
#1 COIN SW.
O-B
7 RESET
W-B
6
6 +5V.
W-O
18
4 COIN
PINK
J
REVISION
NAME
DATE
NONE
V. Caporosso
12/7/81

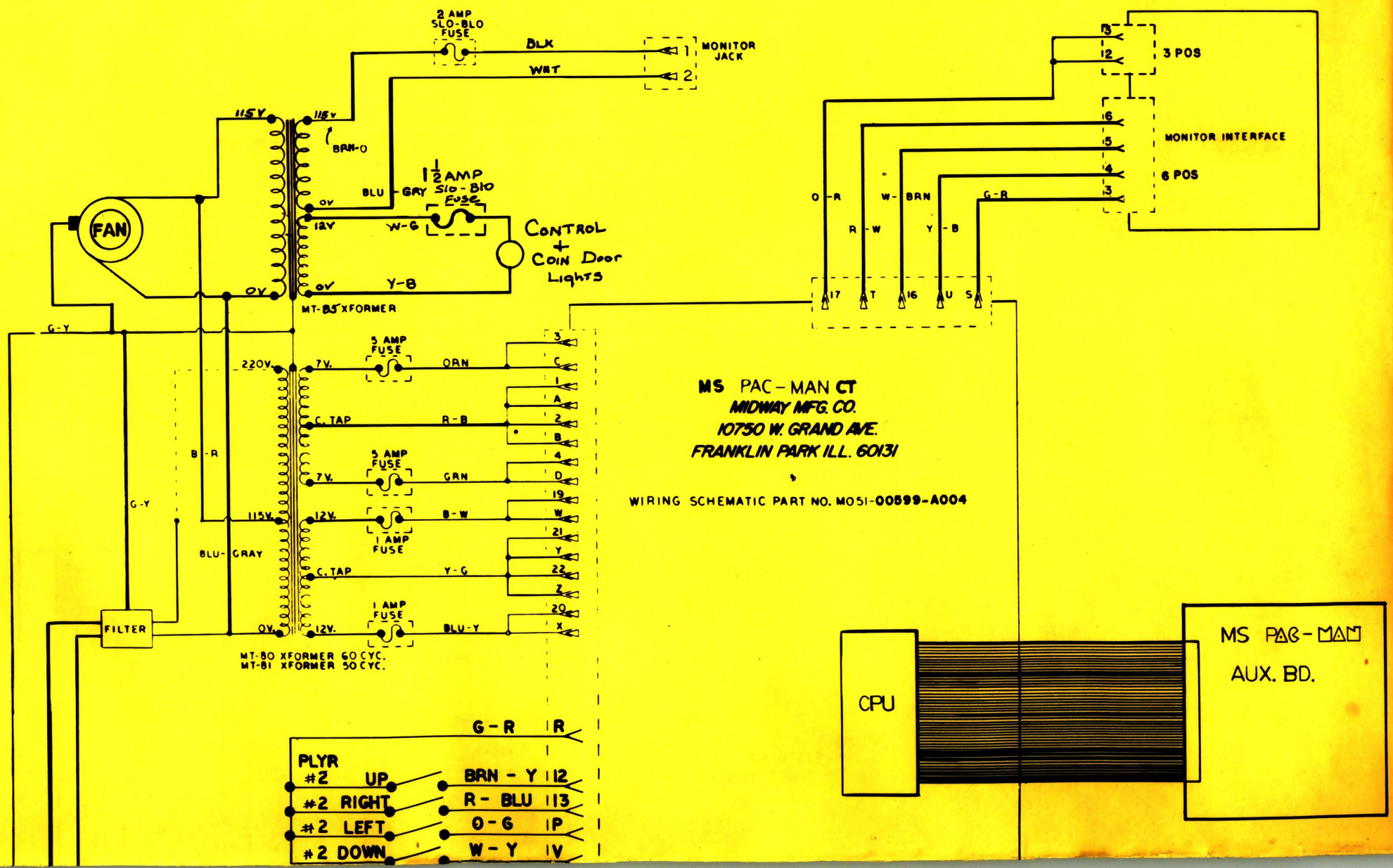
2 AMP SLO-BLO FUSE
BLK
WHT
MONITOR JACK
1
2
115V
115V
BRN-O
1½ AMP SLO-BLO Fuse
BLU
GRY
0V
12V
W-G
CONTROL + COIN DOOR LIGHTS
FAN
0V
0V
Y-B
MT-85 XFORMER
G-Y
220V
7V.
5 AMP FUSE
ORN
C. TAP
R-B
5 AMP FUSE
7V.
GRN
B-R
G-Y
115V.
12V.
B-W
1 AMP FUSE
BLU-GRAY
C. TAP
Y-G
1 AMP FUSE
FILTER
0V.
12V.
BLU-Y
MT-80 XFORMER 60 CYC.
MT-81 XFORMER 50 CYC.
3
C
1
A
2
B
4
D
19
W
21
Y
22
Z
20
X
G-R
R
PLYR #2 UP
BRN - Y
12
#2 RIGHT
R - BLU
13
#2 LEFT
O-G
P
#2 DOWN
W - Y
V
3 POS
MONITOR INTERFACE
6 POS
O-R
W-BRN
G-R
R-W
Y-B
17
T
16
U
S
MS PAC-MAN CT
MIDWAY MFG. CO.
10750 W. GRAND AVE.
FRANKLIN PARK ILL. 60131
WIRING SCHEMATIC PART NO. MO51-00599-A004
CPU
MS PAC-MAN
AUX. BD.

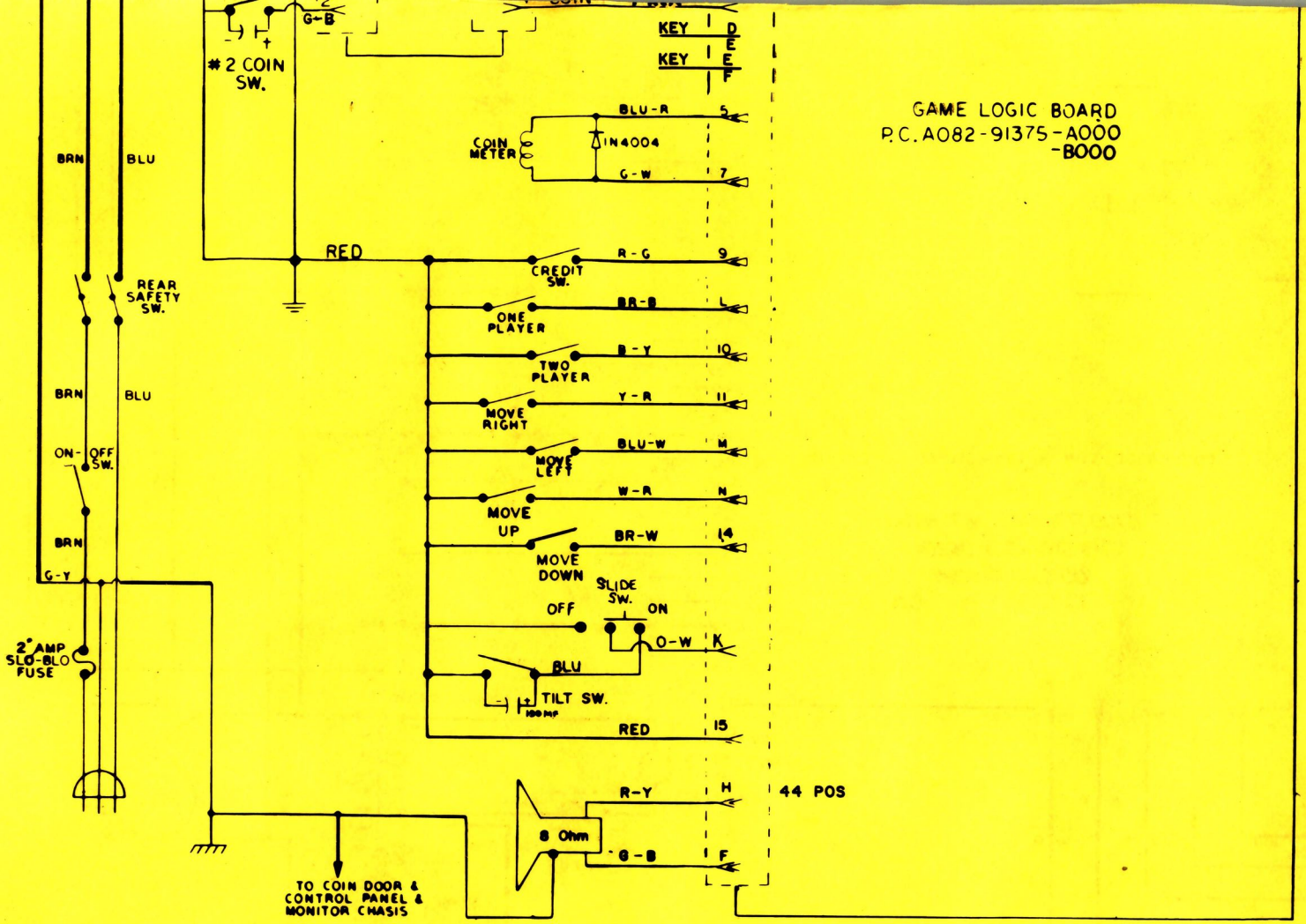
GAME LOGIC BOARD
P.C. A082-91375-A000
-B000
KEY D
KEY E
F
#2 COIN SW.
G-B
BLU-R 5
COIN METER
IN4004
G-W 7
BRN
BLU
RED
REAR SAFETY SW.
R-G 9
CREDIT SW.
ONE PLAYER
BR-B L
TWO PLAYER
B-Y 10
MOVE RIGHT
Y-R 11
MOVE LEFT
BLU-W M
MOVE UP
W-R N
MOVE DOWN
BR-W 14
ON-OFF SW.
SLIDE SW.
OFF
ON
O-W K
2 AMP SLO-BLO FUSE
BLU
TILT SW.
100 MF
RED 15
R-Y H
8 Ohm
G-B F
44 POS
TO COIN DOOR & CONTROL PANEL & MONITOR CHASIS

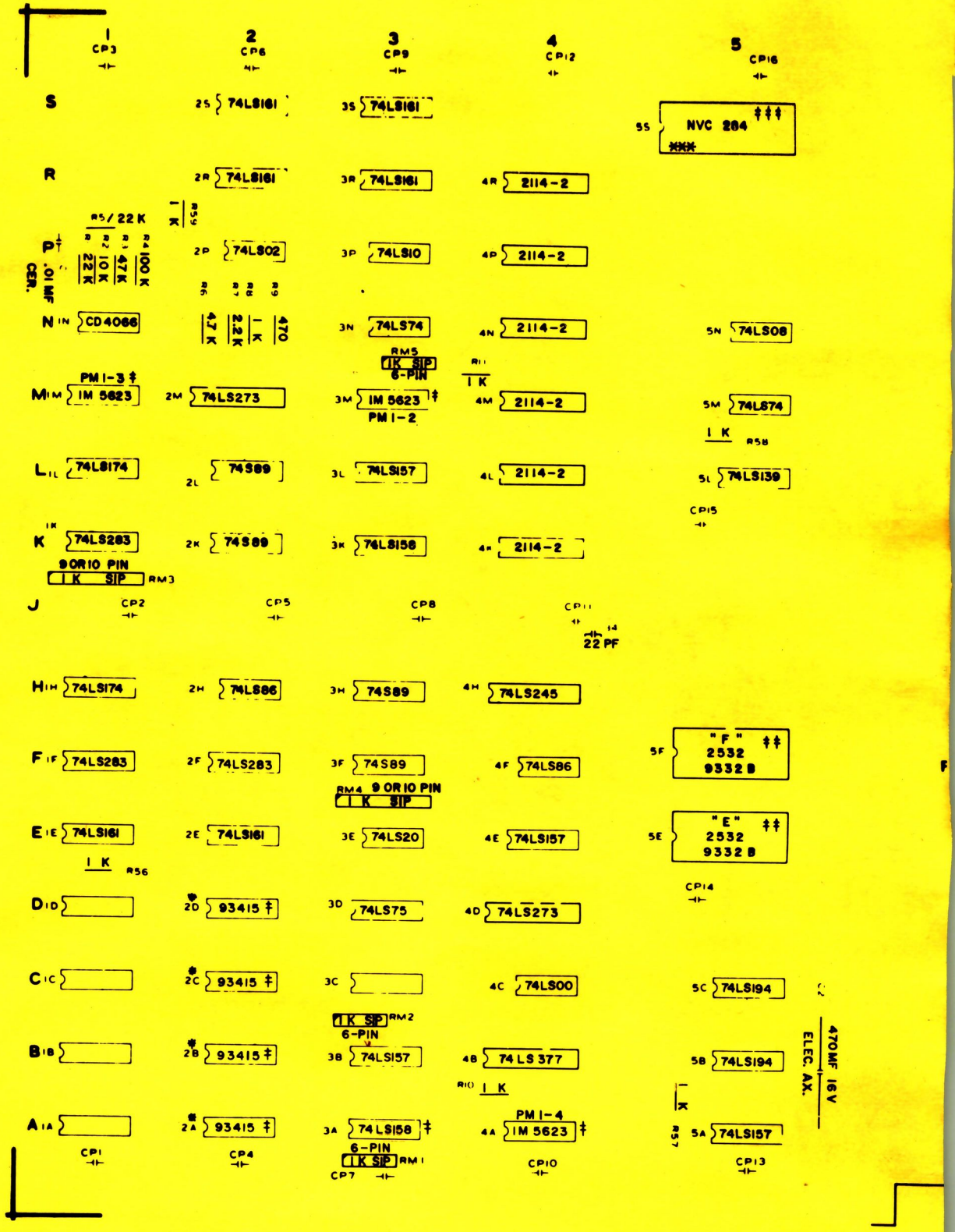

* RAM HEAT SINK ASSEMLY

NOTE 1: PLACE EITHER 74LS259 IN LOC. 8K
OR CD4099 IN LOC. 7K

UNMARKED CAPS ARE .1MF CER. AX.

RESISTOR UNIT = Ohm

‡ — 16 PIN SOCKET (9 PER)

‡‡ — 24 PIN SOCKET (6 PER)

‡‡‡ — 28 PIN SOCKET (2 PER)

‡‡‡‡ — 40 PIN SOCKET (1 PER)

XX NOTE :

XXX NOTE :

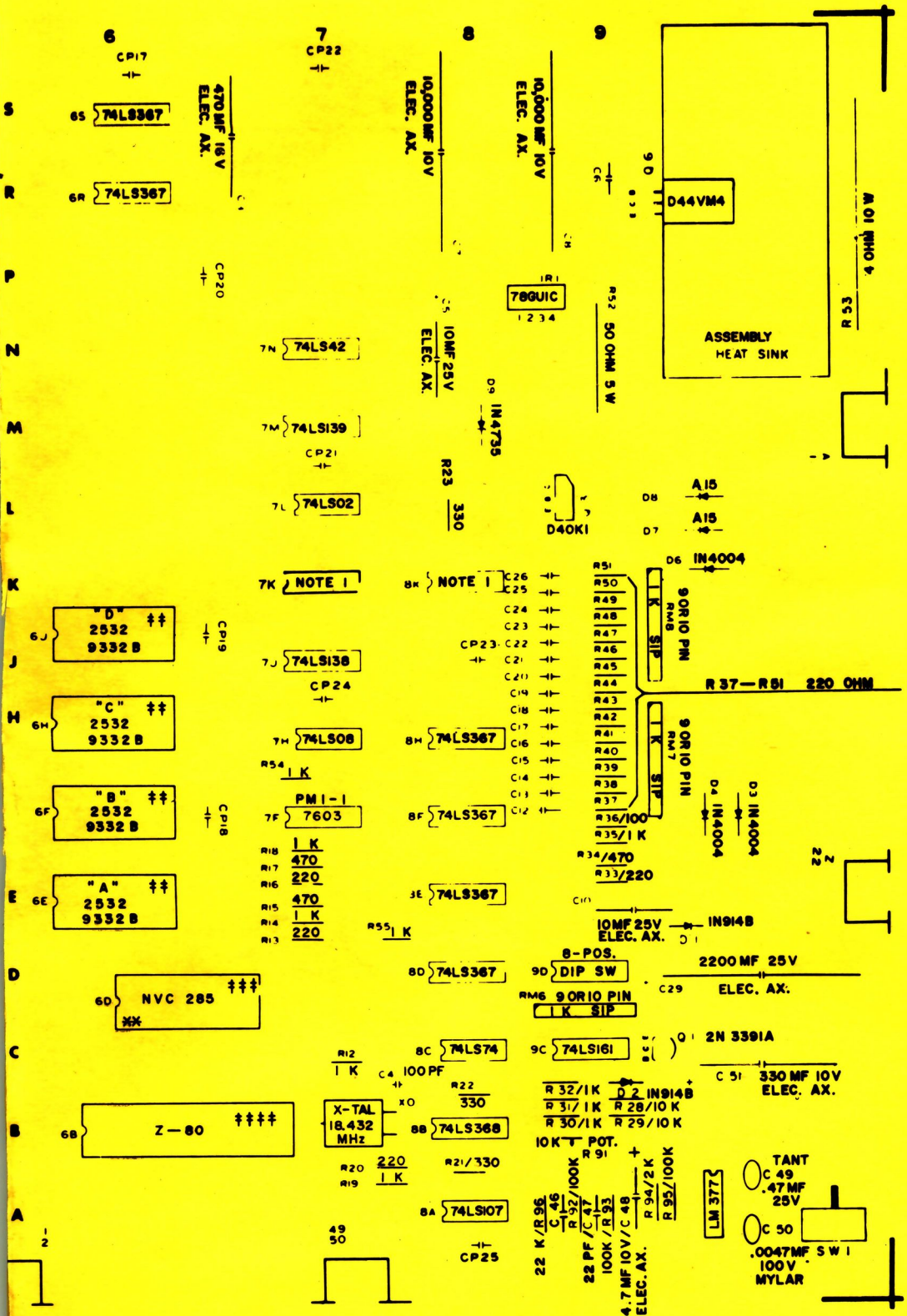

THIS LOCATION CAN UTLIZE EITHER
(A) CUSTOM CHIP NVC285 OR (B) PLUG IN P C A082-91383-B000 Z-80 SYNC BUSS CONTROLLER (285)
THIS LOCATION CAN UTLIZE EITHER
(A) CUSTOM CHIP NVC 284 OR (B) PLUG IN P C A082-91384-B000 V-RAM ADDRESSER (284)

M051-00932-B026

DO NOT SCALE DWG	HEAT TREAT	SCALE	USED ON PAC-MAN "B"	MIDWAY MFG. CO. FRANKLIN PK ILL.
DIM TOLERANCES UNLESS SPECIFIED	DWN C.L.	MAT'L	NO REQ'D 1 PER	ASSEMBLY DRAWING PAC—MAN
	CKD	FINISH	DATE 10/9/80	PART NO. A082-91375-B000

REVISIONS

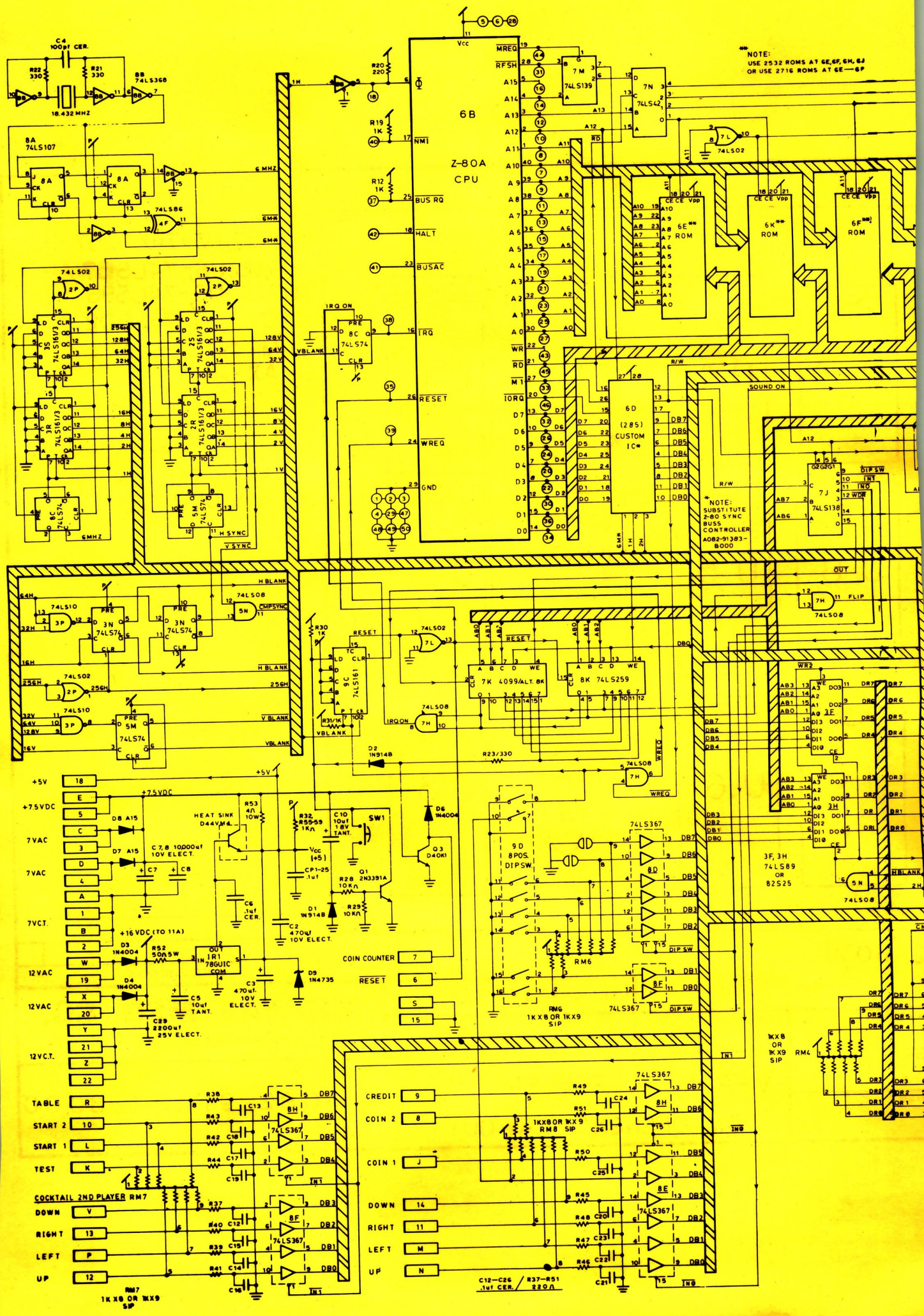

6B
Z-80A
CPU
NOTE:
USE 2532 ROMS AT 6E, 6F, 6H, 6J
OR USE 2716 ROMS AT 6E—6P
6E** ROM
6K** ROM
6F** ROM
6D (285) CUSTOM IC*
*NOTE: SUBSTITUTE Z-80 SYNC BUSS CONTROLLER A082-91383-B000
7K 4099/ALT. 8K
8K 74LS259
9D 8POS. DIPSW.
RM6 1KX8 OR 1KX9 SIP
3F, 3H 74LS89 OR 82S25
1KX8 OR 1KX9 SIP RM4
1KX8 OR 1KX9 RM8 SIP
COCKTAIL 2ND PLAYER RM7
RM7 1KX8 OR 1KX9 SIP
C12—C26 .1uf CER. / R37—R51 220Ω
+5V
+7.5VDC
7VAC
7VCT.
12VAC
12VCT.
TABLE
START 2
START 1
TEST
DOWN
RIGHT
LEFT
UP
CREDIT
COIN 2
COIN 1
COIN COUNTER
RESET

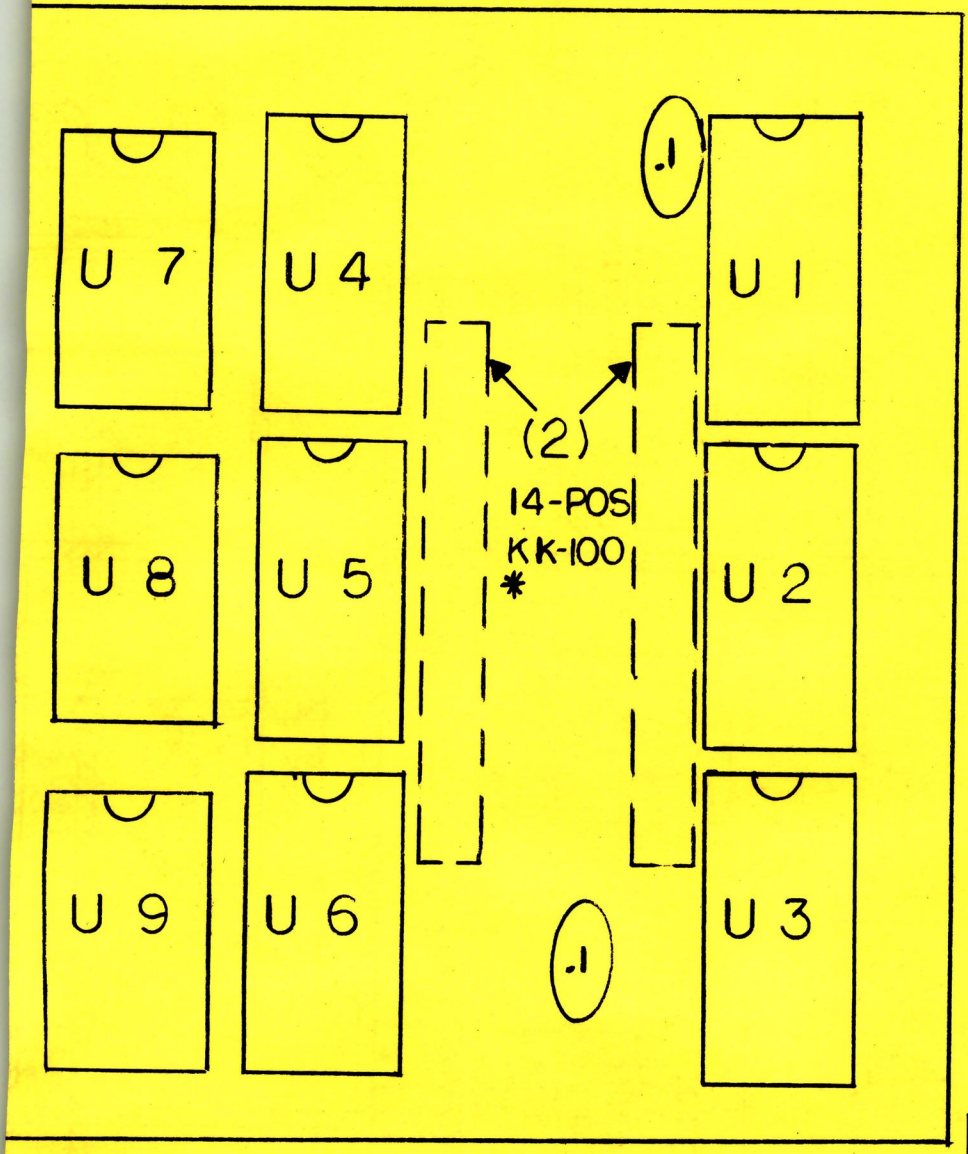

U1, U2, U3; - 74LS257
U4, U5, U6, - 74LS157
U7, U8, U9, - 74LS86
U10 - 74LS02
.1 MF 50V - (5)
AX CER
1K ¼ w - (1)
(2) - 14 - POS. KK-100
* MOUNTED ON
SOLDER SIDE

82-8034

			REVISIONS
EAT TREAT	SCALE	USED ON PAC-MAN	MIDWAY MFG. CO.
		NO. REQ'D 1-PER.	FRANKLIN PK. ILL.
AT'L.	V-RAM ADDRESSER (284)		PART NO.
NISH	COMPONENENT-LAY-OUT		A082_9138 4_B000

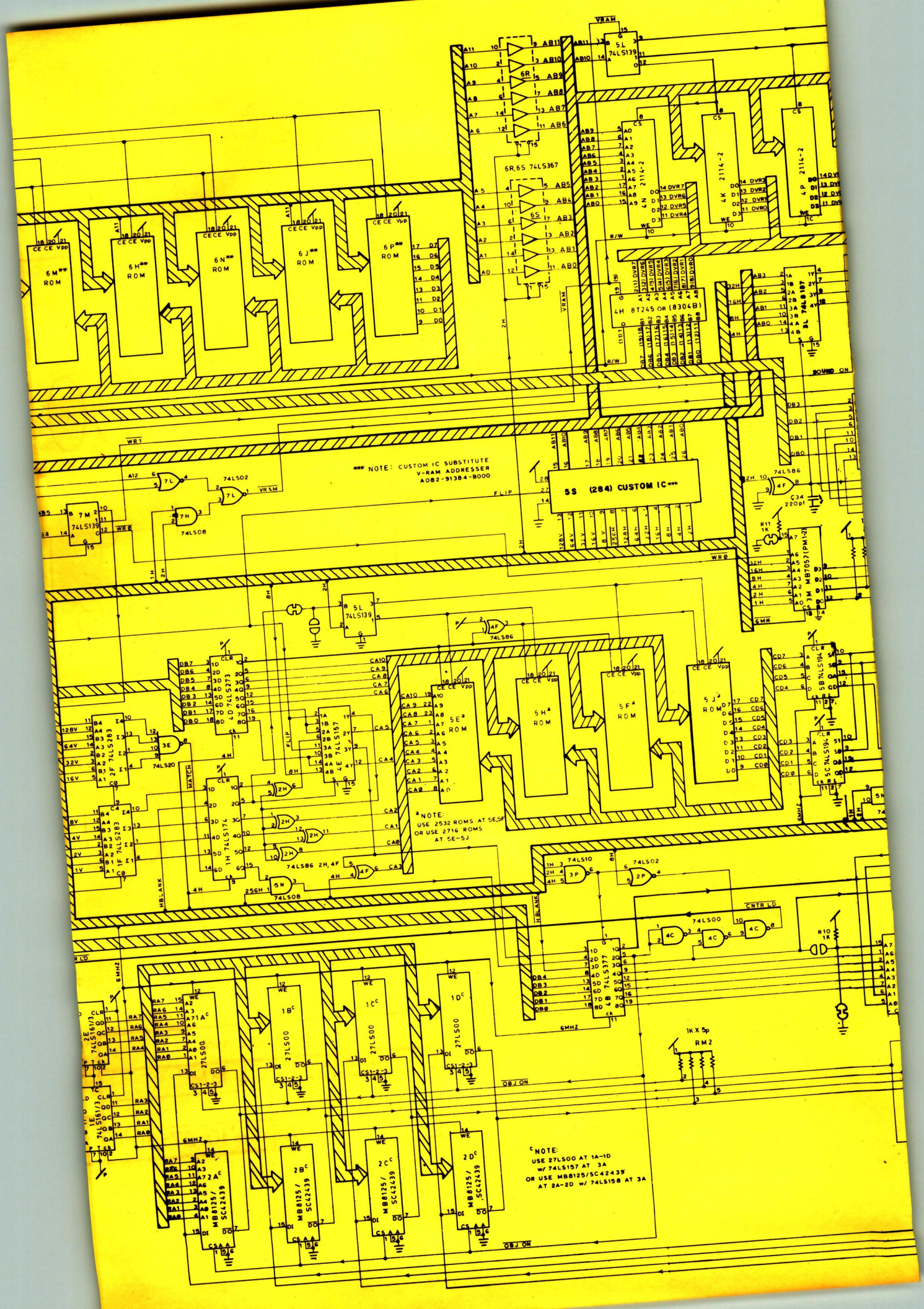

*** NOTE: CUSTOM IC SUBSTITUTE
V-RAM ADDRESSER
A082-91384-8000
5S (284) CUSTOM IC***
6M** ROM
6H** ROM
6N** ROM
6J** ROM
6P** ROM
6R,6S 74LS367
4H 8T245 OR (8304B)
3L 74LS157
3M MB7057(PM1-2)
5L 74LS139
5E^a ROM
5H^a ROM
5F^a ROM
5J^a ROM
5B 74LS194
5C 74LS194
4D 74LS273
4E 74LS157
2F 74LS283
1F 74LS283
1H 74LS174
4B 74LS377
1A^c 27LS00
1B^c 27LS00
1C^c 27LS00
1D^c 27LS00
2A^c MB8125/SC42439
2B^c MB8125/SC42439
2C^c MB8125/SC42439
2D^c MB8125/SC42439
1E 74LS161/3
2E 74LS161/3
1K X 5p RM2
^a NOTE:
USE 2532 ROMS AT 5E,5F
OR USE 2716 ROMS
AT 5E-5J
^c NOTE:
USE 27LS00 AT 1A-1D
w/ 74LS157 AT 3A
OR USE MB8125/SC42439
AT 2A-2D w/ 74LS158 AT 3A

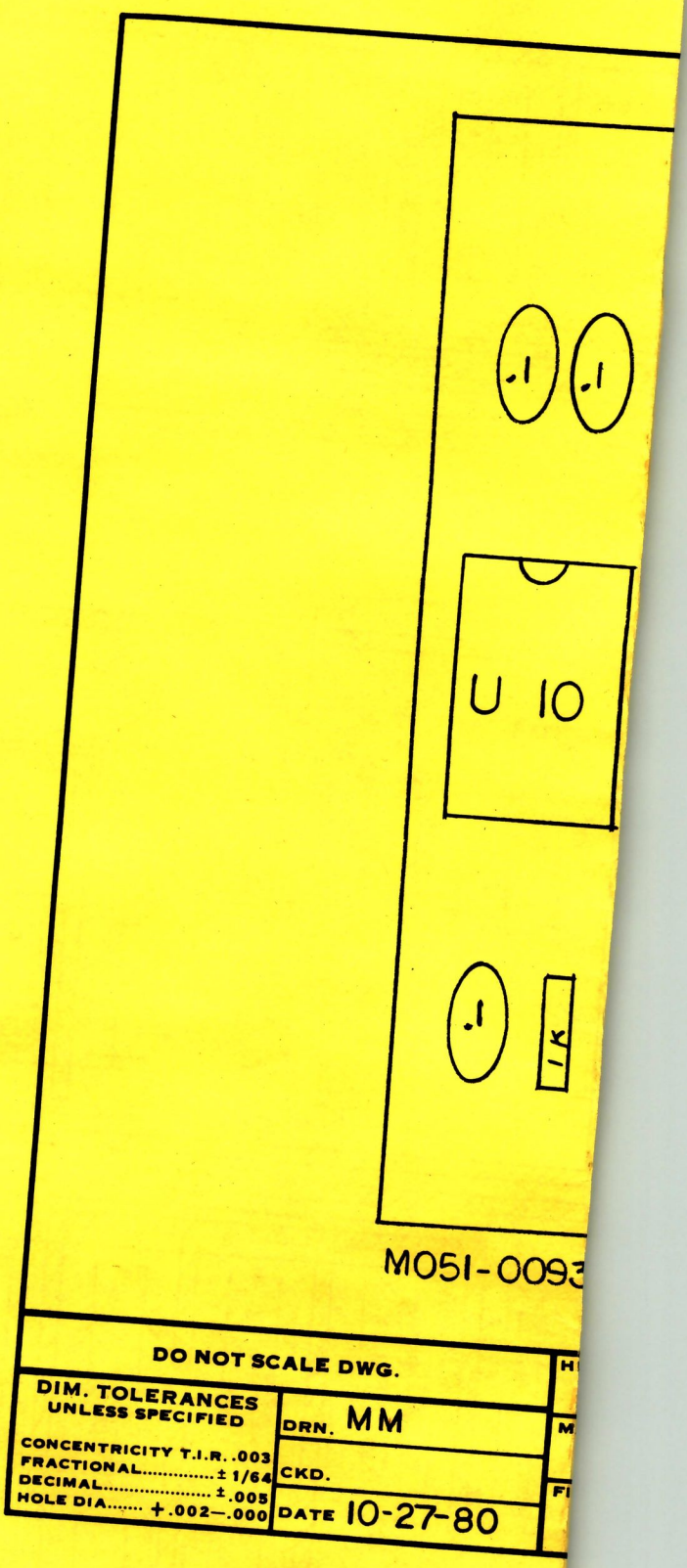
-1
-1
U 10
-1
1K
M051-0093
DO NOT SCALE DWG.
DIM. TOLERANCES
UNLESS SPECIFIED
CONCENTRICITY T.I.R. .003
FRACTIONAL ± 1/64
DECIMAL ± .005
HOLE DIA +.002 -.000
DRN. MM
CKD.
DATE 10-27-80

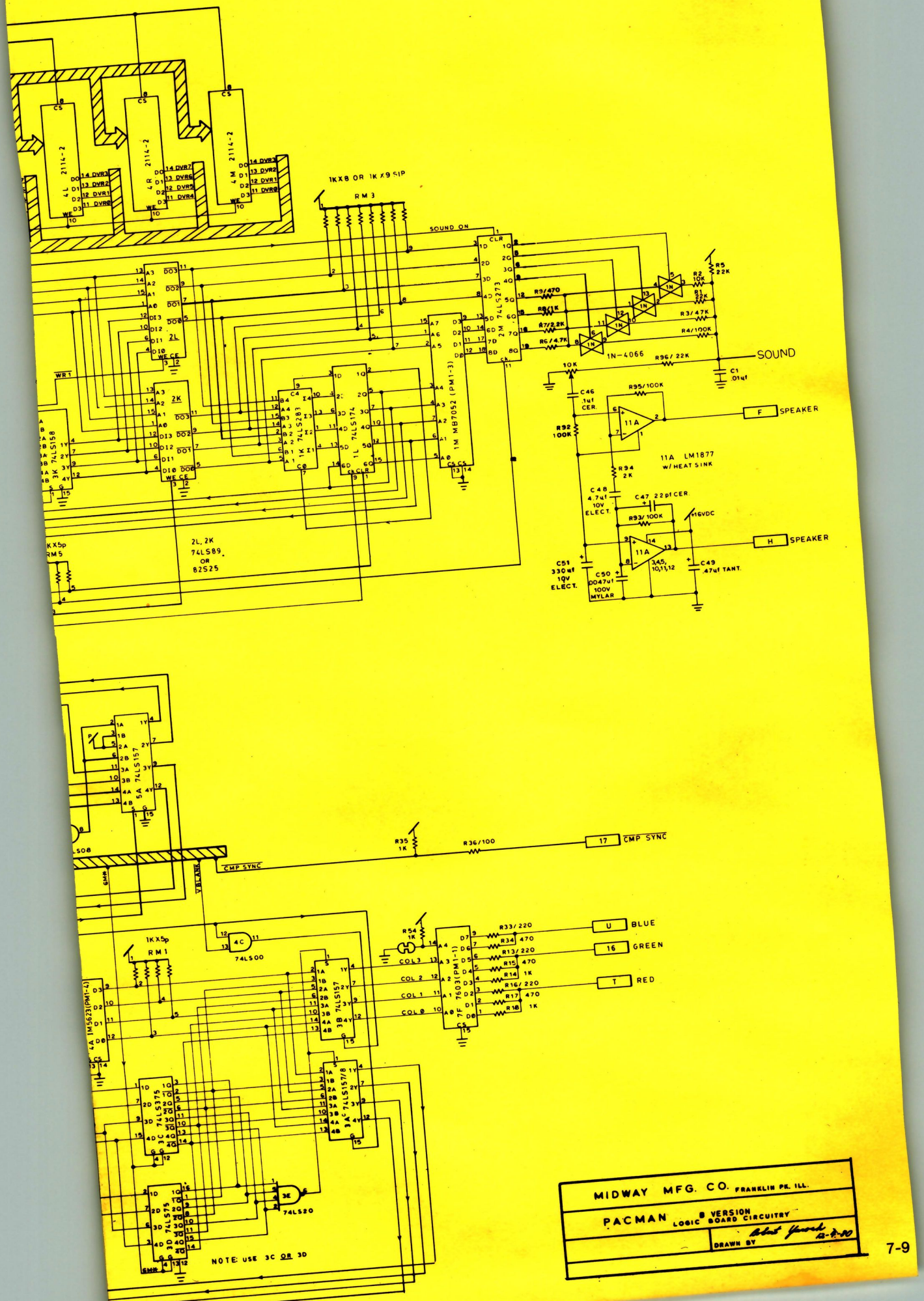

4L 2114-2
4R 2114-2
4M 2114-2
1KX8 OR 1KX9 SIP
RM 3
SOUND ON
2M 74LS273
1N-4066
R96/22K
SOUND
C1 .01uf
R95/100K
F SPEAKER
11A LM1877 W/HEAT SINK
R94 2K
C48 4.7uf 10V ELECT.
C47 22pf CER.
R93/100K
+16VDC
H SPEAKER
C51 330uf 10V ELECT.
C50 .0047uf 100V MYLAR
C49 .47uf TANT.
1M MB7052 (PM1-3)
1K 74LS283
1L 74LS174
3K 74LS158
2L, 2K 74LS89 OR 82S25
5A 74LS157
R35 1K
R36/100
17 CMP SYNC
CMP SYNC
VBLANK
1KX5p RM1
4C 74LS00
3B 74LS157
3A 74LS157/8
3C 74LS375
3D 74LS75
3E 74LS20
7F 7603(PM1-1)
R54 1K
COL 3
COL 2
COL 1
COL 0
R33/220
R34 470
R13/220
R15 470
R14 1K
R16/220
R17 470
R18 1K
U BLUE
16 GREEN
T RED
NOTE: USE 3C OR 3D
MIDWAY MFG. CO. FRANKLIN PK. ILL.
PACMAN B VERSION LOGIC BOARD CIRCUITRY
DRAWN BY

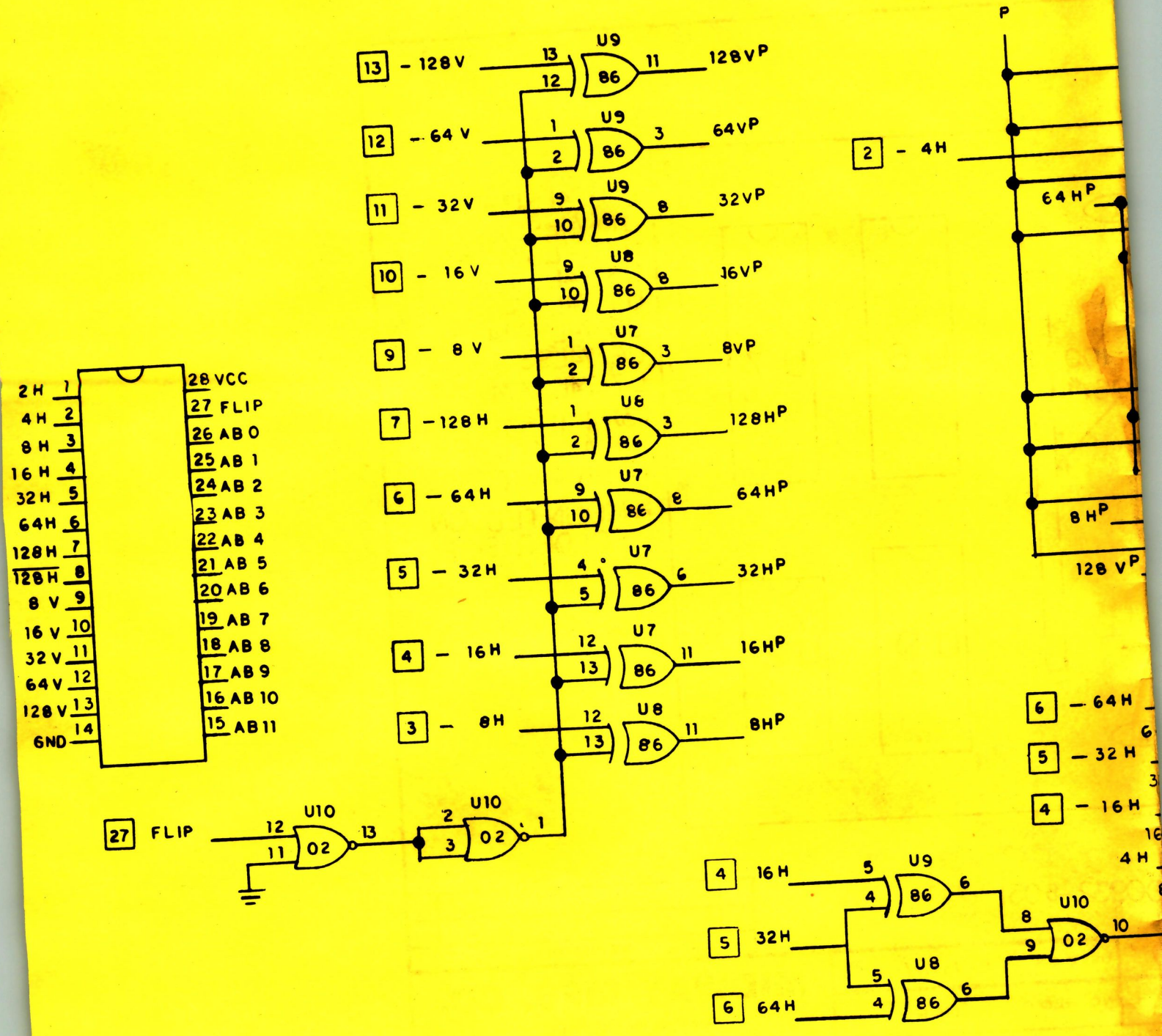
13 - 128V
12 - 64V
11 - 32V
10 - 16V
9 - 8V
7 - 128H
6 - 64H
5 - 32H
4 - 16H
3 - 8H
2 - 4H
27 FLIP
U9
U8
U7
U6
U10
86
02
128VP
64VP
32VP
16VP
8VP
128HP
64HP
32HP
16HP
8HP
128 VP
2H 1
4H 2
8H 3
16H 4
32H 5
64H 6
128H 7
128H 8
8V 9
16V 10
32V 11
64V 12
128V 13
GND 14
28 VCC
27 FLIP
26 AB 0
25 AB 1
24 AB 2
23 AB 3
22 AB 4
21 AB 5
20 AB 6
19 AB 7
18 AB 8
17 AB 9
16 AB 10
15 AB 11
4 16H
5 32H
6 64H

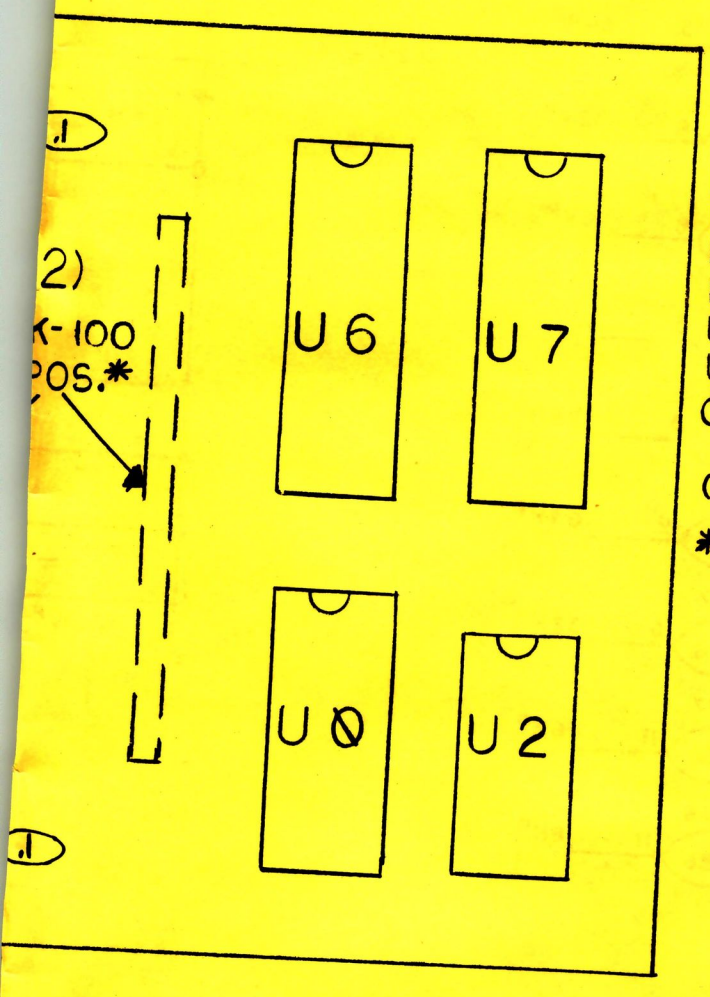

U0 - 74LS139
U1 - 74LS02
U2 - 74LS74
U3 - 74LS02
U4 - 74LS74
U5 - 74LS244
U6 - 74LS374
U7 - 74LS374
(3) - .1 MF 50v AX. CER.
(1) - 1K 1/4w RESIS.
* MOUNTED ON SOLDER SIDE

00932-B031

REVISIONS

USED ON PAC-MAN

NO. REQ'D 1-PER

MIDWAY MFG. CO.
FRANKLIN PK. ILL.

YNC BUSS CONTROLER(285)

NENT LAYOUT

PART NO. A082-91383-B000

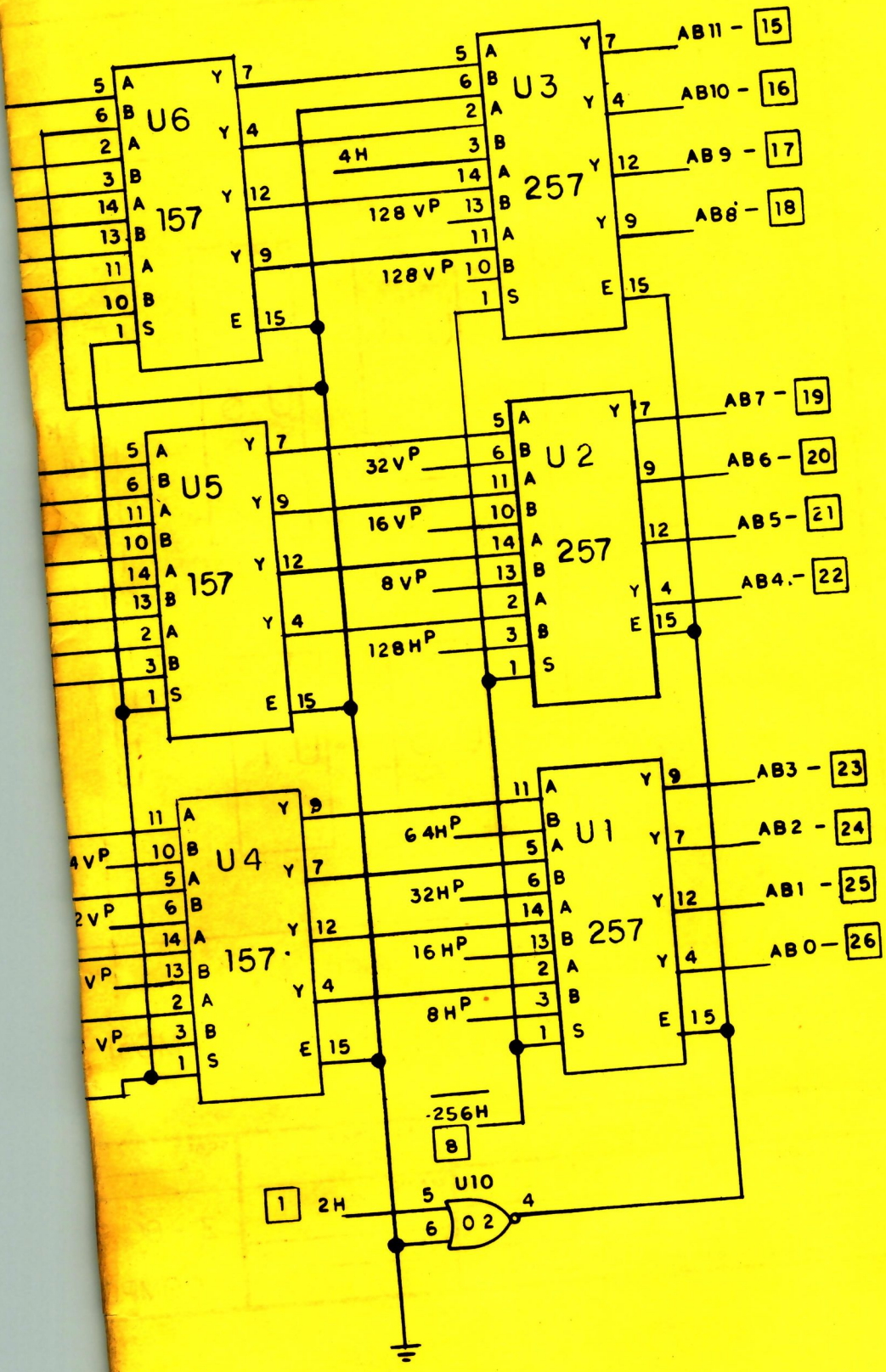

□ = 28 PIN CONNECTOR

P = PULL UP

MIDWAY MFG. CO
FRANKLIN PARK ILL

DRN M.M	CKD
DATE NOV 25 80	NO. REQ'D 1
USED ON PAC-MAN	
DESC. V RAM ADDRESSER (NVC-284)	
PART NO. A082-91384-B000	

SCHEMATIC PART NO. M051 00932 B032

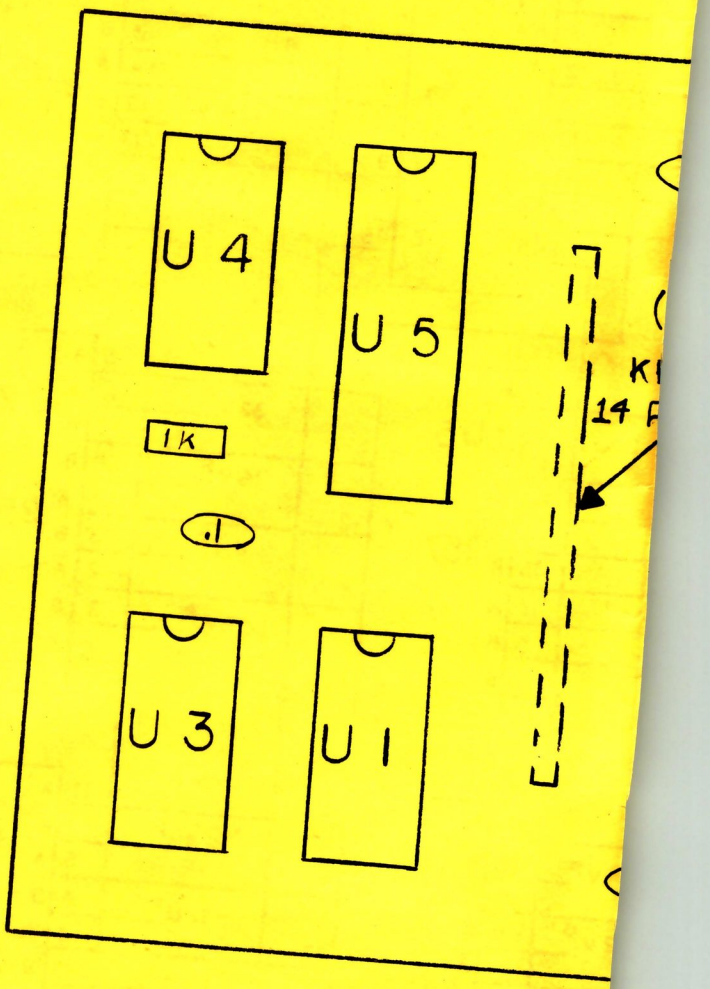

M051-

DO NOT SCALE DWG.		HEAT TREAT	SCALE
DIM. TOLERANCES UNLESS SPECIFIED CONCENTRICITY T.I.R. .003 FRACTIONAL ± 1/64 DECIMAL ± .005 HOLE DIA + .002 − .000	DRN. M.M CKD. YS DATE 10-23-80	MAT'L.	Z-80 S COMPO
		FINISH	

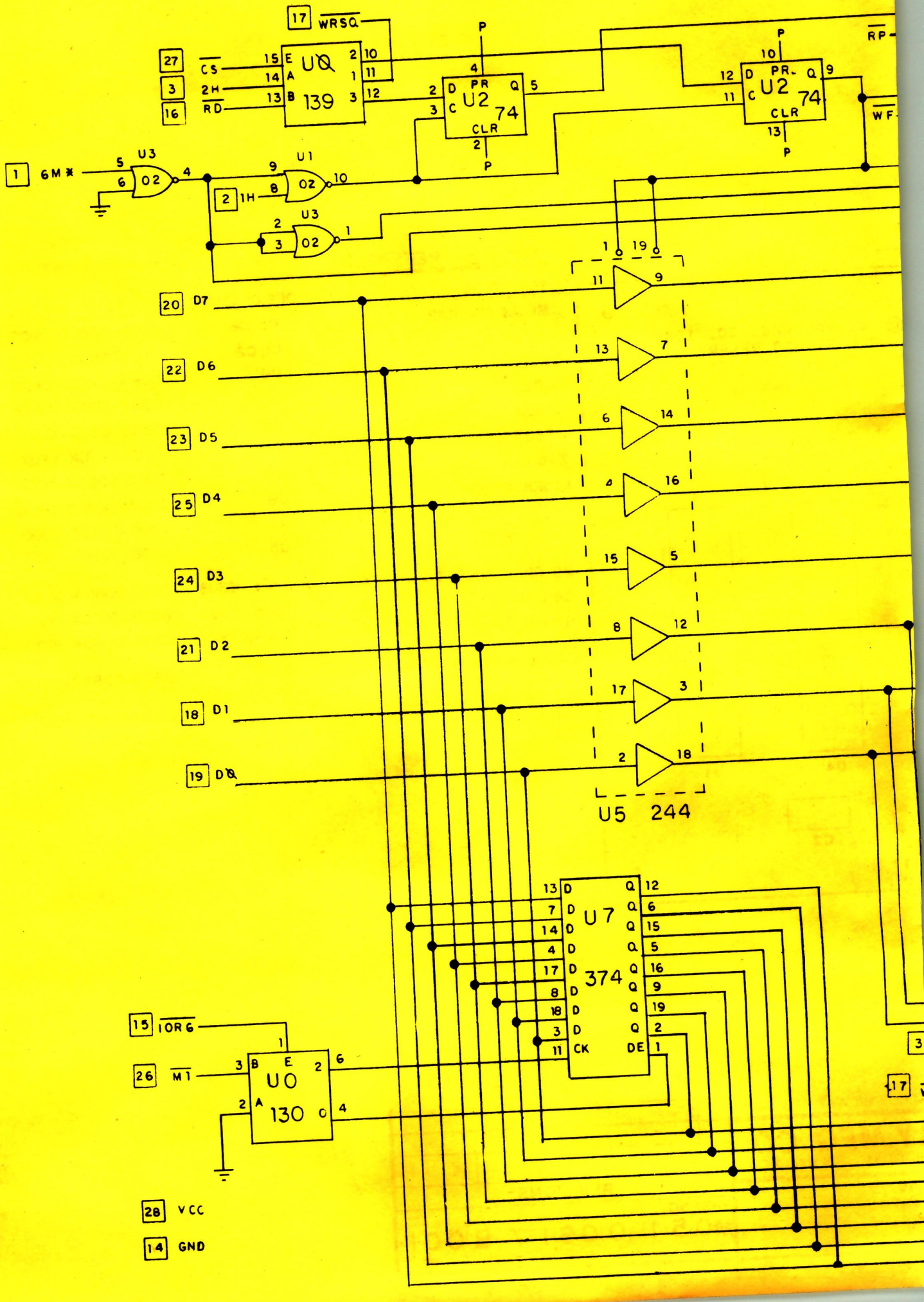
17 WRSQ
27 CS
3 2H
16 RD
U0 139
P
U2 74
CLR
RP
WF
1 6M*
U3 02
U1 02
2 1H
20 D7
22 D6
23 D5
25 D4
24 D3
21 D2
18 D1
19 DQ
U5 244
U7 374
15 IORQ
26 M1
U0 130
28 VCC
14 GND

© MIDWAY MFG. CO. 1981
ALL RIGHTS RESERVED

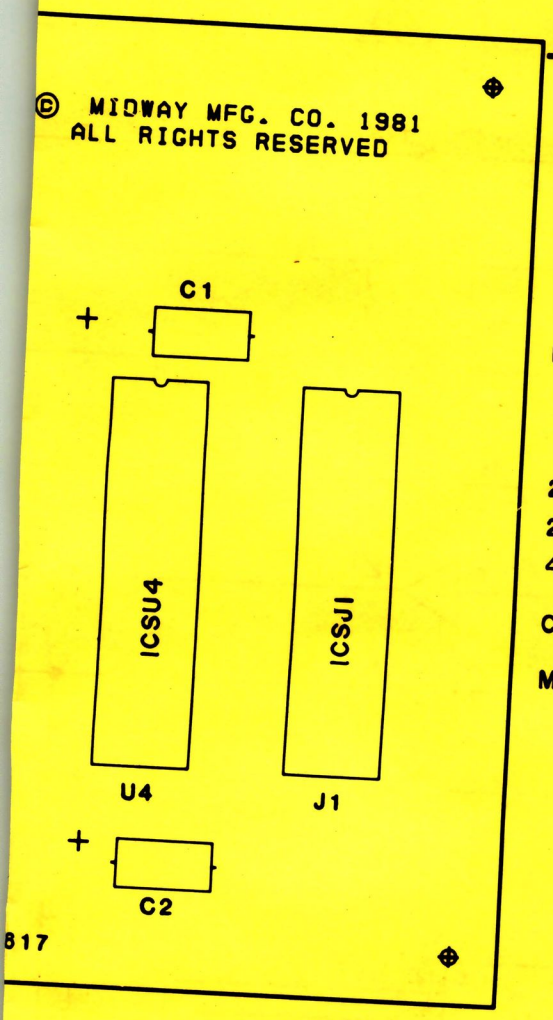

CROSS REFERENCE LIST

DESCRIPTION	QUAN.	DESIGNATION	PART NO.
.IMF AX. CER. CAP	4	C3-C6	0508-00800-0900
10MF AX. ELEC.	2	C1, C2	0508-00800-1100
CG820	1	U0	0066-014CX-XXQX
CG821	1	U1	0066-015CX-XXQX
CG822	1	U2	0066-016CX-XXQX
CG823	1	U3	0066-017CX-XXQX
Z-80A	1	U4	0932-00807-0000
EPROM 2532	1	U6	0595-00803-0200
" "	1	U7	0595-00803-0300
" 2716	1	U5	0595-00803-0100
20 PIN IC SOCKET	4	ICSU0-ICSU3	0508-00804-0100
24 PIN " "	3	ICSU5-ICSU7	0508-00804-0500
40 PIN " "	2	ICSU4, ICSJ1	0508-00804-1800
CABLE ASS'Y 40-PIN	1	J1	0595-00804-0200
MS. PAC-MAN AUX. P.C. BOARD	1		A080-91415-B617

RTY OF MIDWAY MFG. CO.

AY MFG. CO.
IL. 60131 A BALLY CO.

ING
P.C.
R

REVISIONS

PART NO.
M05-1-0061-7-B001

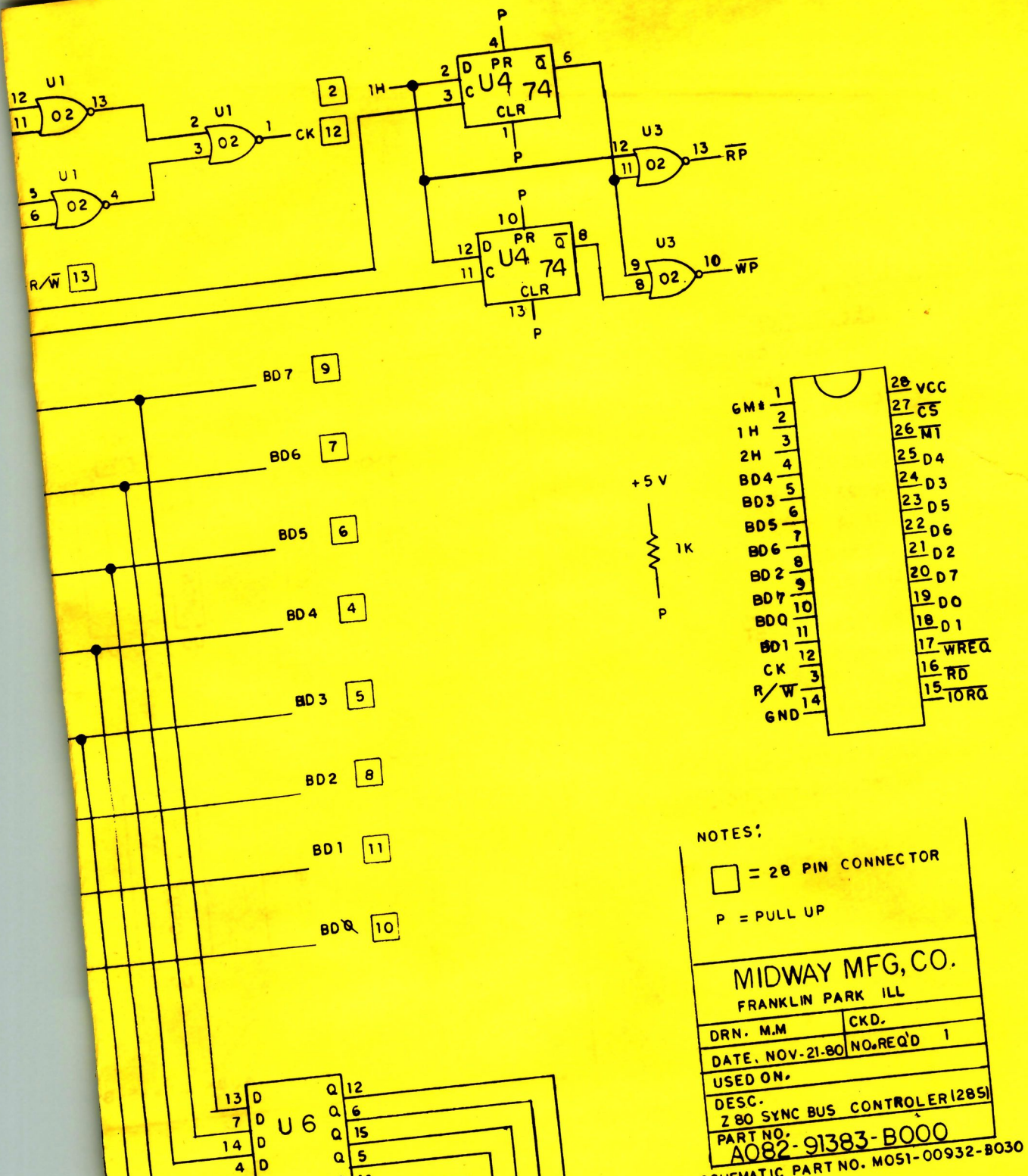

NOTES:

□ = 28 PIN CONNECTOR

P = PULL UP

MIDWAY MFG, CO. FRANKLIN PARK ILL	
DRN. M.M	CKD.
DATE. NOV-21-80	NO. REQ'D 1
USED ON.	
DESC. Z 80 SYNC BUS CONTROLER (285)	
PART NO. A082-91383-B000	

SCHEMATIC PART NO. M051-00932-B030

DESIGNATION LIST

DESIGNATION	DESCRIPTION
C1,C2	10 MF ELEC. CAP.
C3-C6	.1MF CER.CAP
IC U0	CG820
" U1	CG821
" U2	CG822
" U3	CG823
" U4	Z-80A
" U5	EPROM 2716
" U6,U7	EPROM 2532
ICSU0-ICSU3	20 PIN IC SOCKET
" U4	40 PIN " "
" U5-ICSU7	24 PIN " "
" J1	40 PIN " "
J1	CABLE ASS'Y. 40-PIN
PCB	MS. PAC-MAN AUX . P.C. BOARD

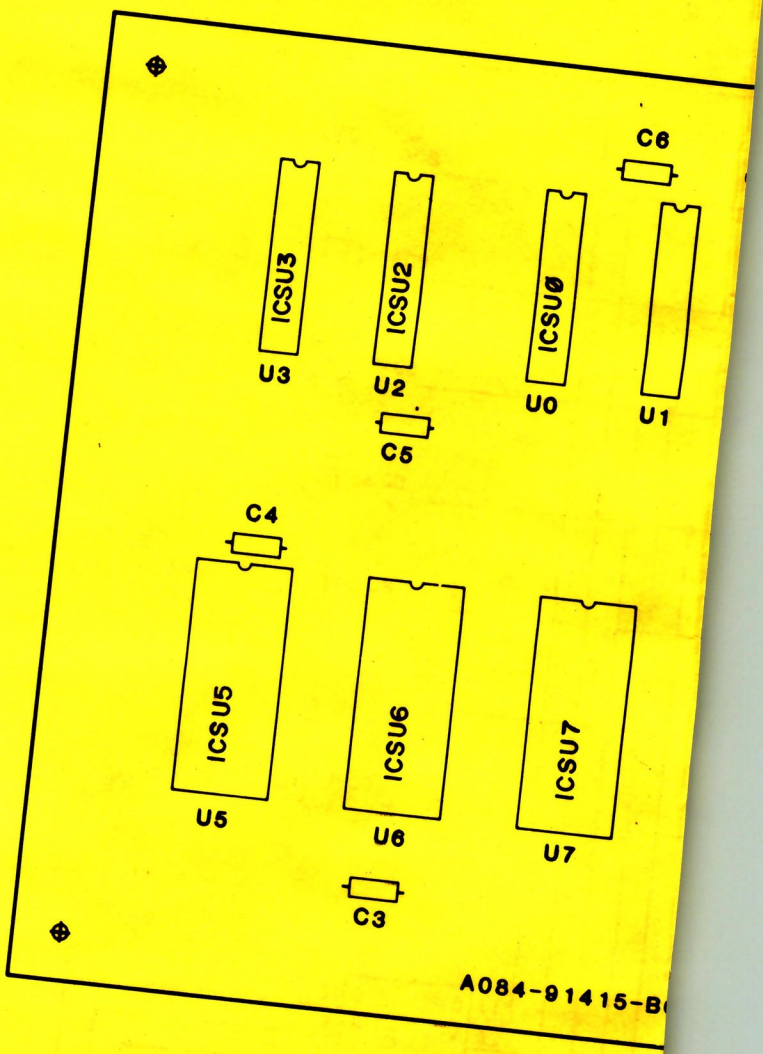

PROJECT ENG : J. SZERSZEN

DIM. TOLERANCES		FIRST USED ON: MS. PAC-MAN			
UNLESS OTHERWISE SPEC		DRN M. M.	DATE 12/29/81	SCALE FULL	MIDWA FRANKLIN PK.
CONCENTRICITY T.I.R.	.002	MECH CHK	MATL		ASSEMBLY DRAV MS. PAC-MAN AUX
FRACTIONAL	± 1/64	ELEC CHK	FINISH		A084-91415-B6
DECIMAL	± 005				
HOLE DIA	+ 002 -- 000				
ANGLE	± 1/2°				

DO NOT SCALE DWG

THIS DWG. IS CONFIDENTIAL & PROPER

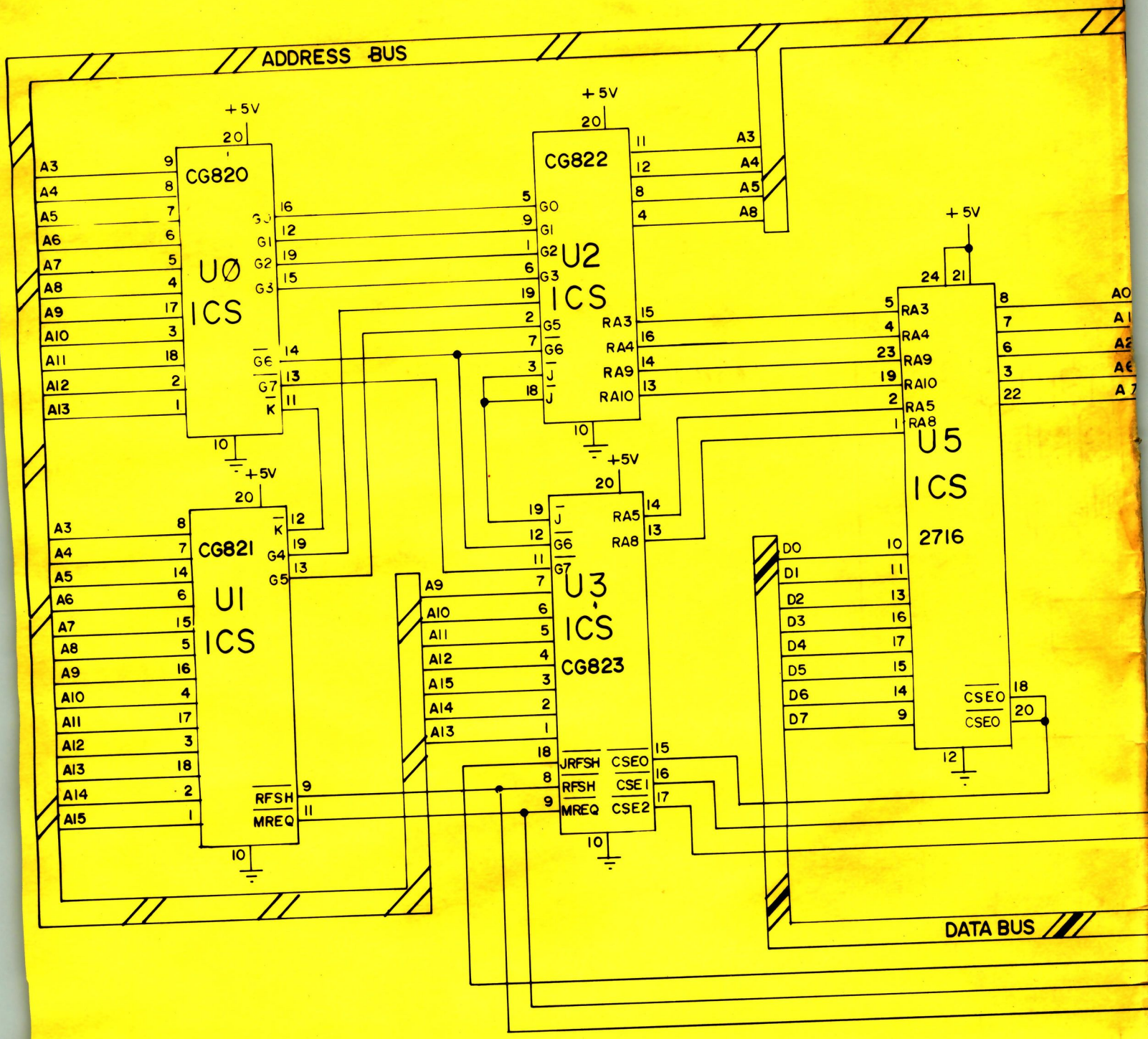

PROJECT ENG: J. SZER

DIM TOLERANCES
UNLESS OTHERWISE SPEC
CONCENTRICITY TIR .00x
FRACTIONAL
DECIMAL
METRIC
ANGLE
DO NOT SCALE DWG

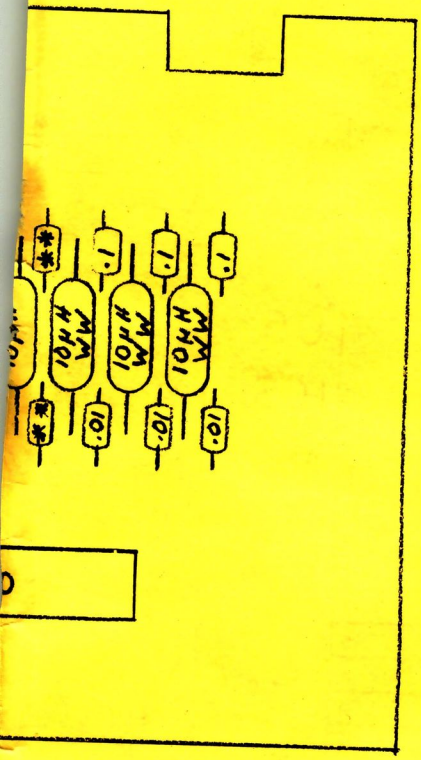

* 100 Pf
** 470 Pf

LE FULL	USED ON PAC-MAN	REVISIONS
	NO. REQ'D 1 PER	MIDWAY MFG. CO. FRANKLIN PK. ILL.
ASSMB. DRWG PAC-MAN FILTER P.C		PART NO. A082-91389-D000

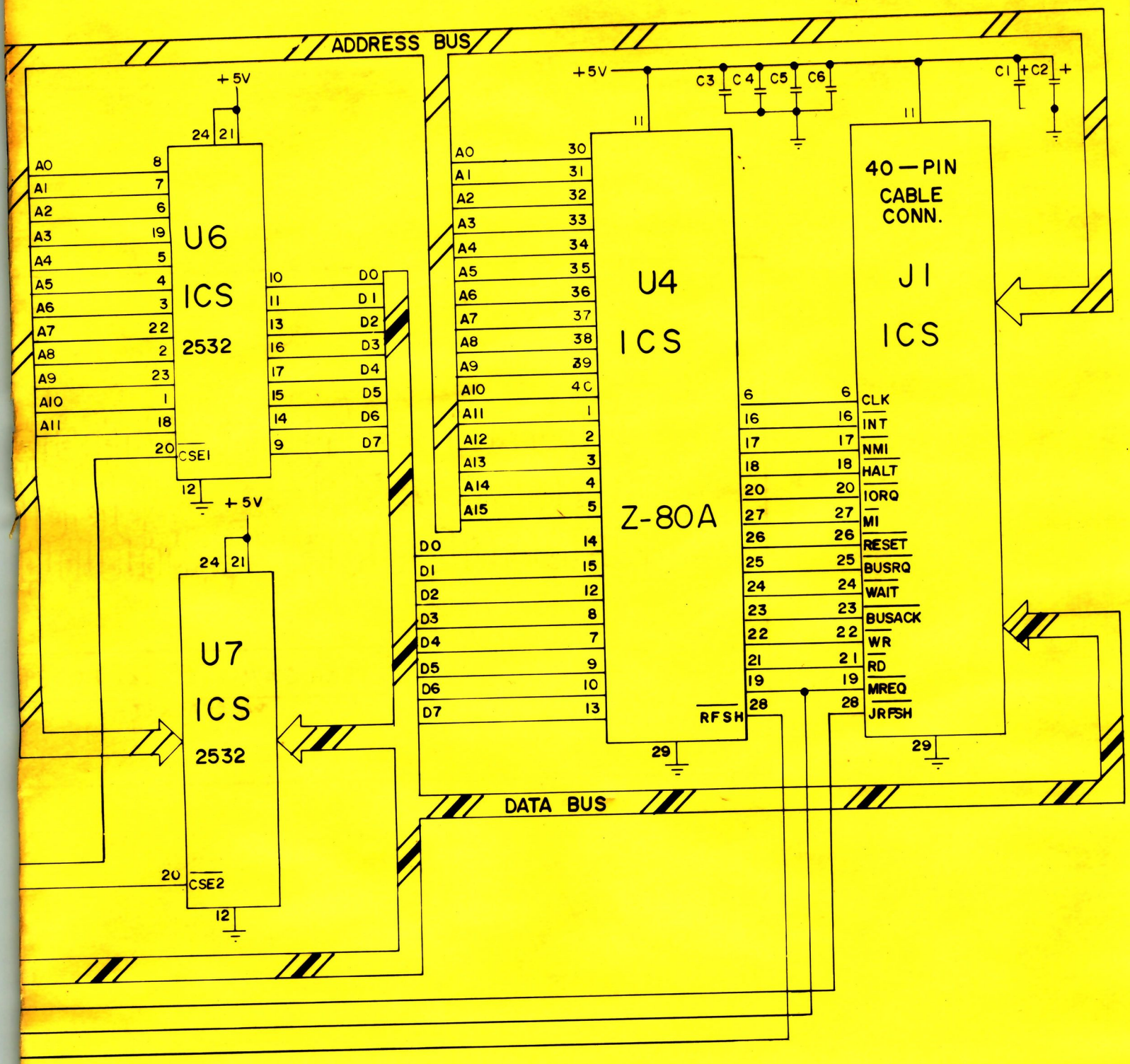

NOTE:

C1,C2 - 10 MF ELEC. CAP
C3-C6 - 1 MF CER. CAP

ZEN

THIS DWG. IS CONFIDENTIAL & PROPERTY OF MIDWAY MFG CO

MS. PAC—MAN
1/4/81 FULL

MIDWAY MFG. CO.
FRANKLIN PK IL 60131

MS. PAC—MAN P.C.
A084-91415-B617
SCHEMATIC

REVISIONS

M051 00617 B002

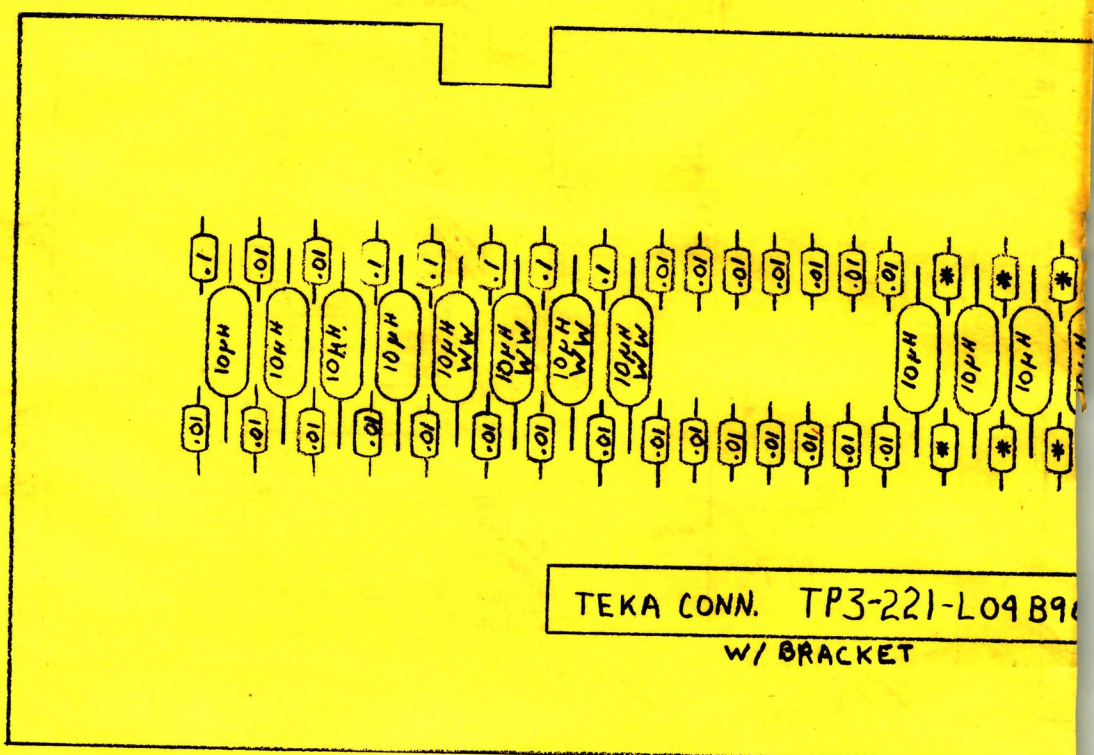

M051-00932-D037

DO NOT SCALE DWG.		HEAT TREAT	SC
DIM. TOLERANCES UNLESS SPECIFIED CONCENTRICITY T.I.R. .003 FRACTIONAL ± 1/64 DECIMAL ± .005 HOLE DIA +.002 −.000	DRN. TJK	MAT'L.	
	CKD.	FINISH	
	DATE 02-11-81		

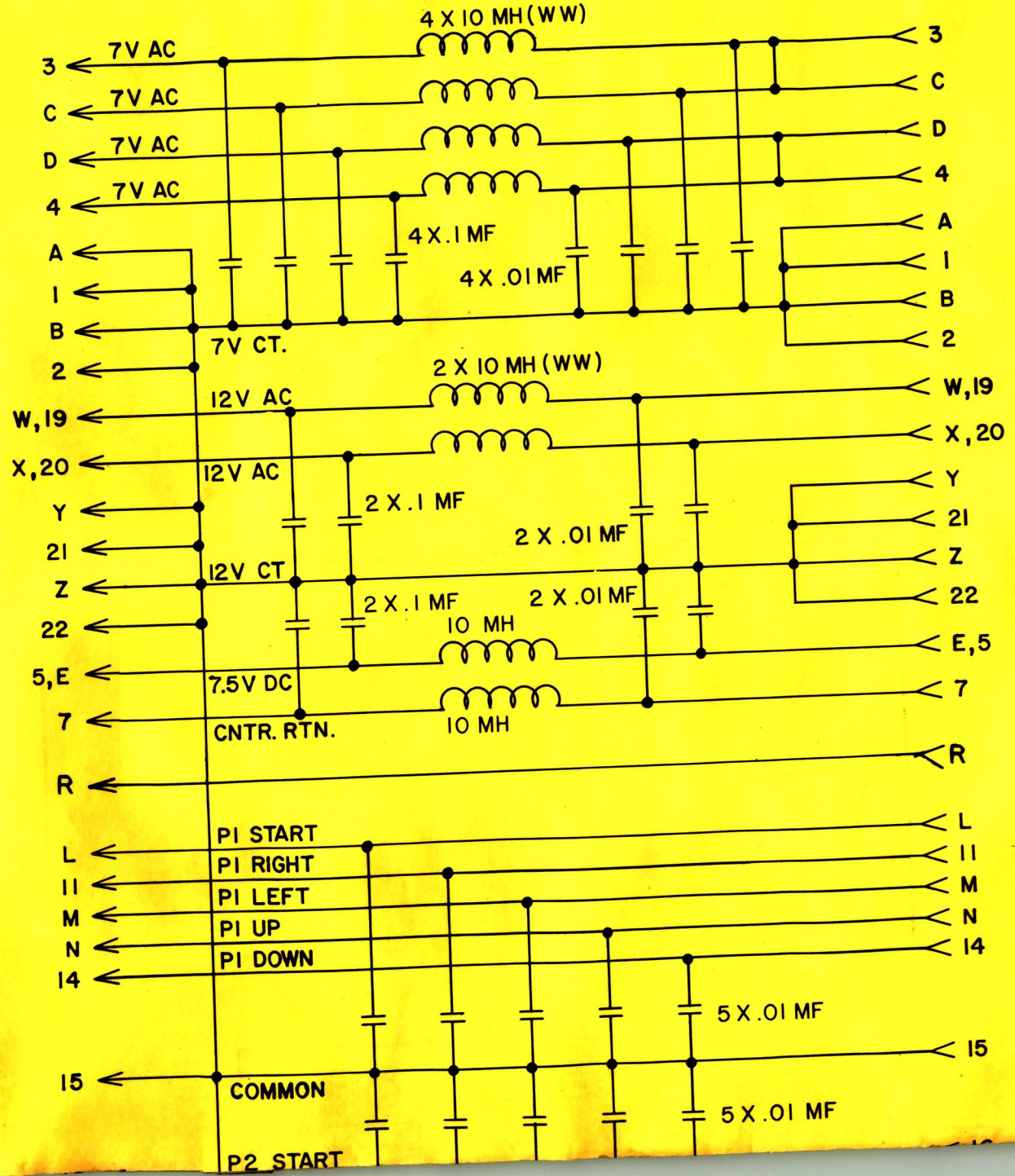

M051-00932-D038

DO NOT SCALE DWG

DIM TOLERANCES UNLESS SPECIFIED

DRN

CKD

DATE 02-11-81

2 PIN

4 PIN

10MF 35V TANT

932-A027

REVISIONS

PAC-MAN

MIDWAY MFG. CO.

FRANKLIN PK ILL

NG

R P.C

PART NO.

A082-91348-C000

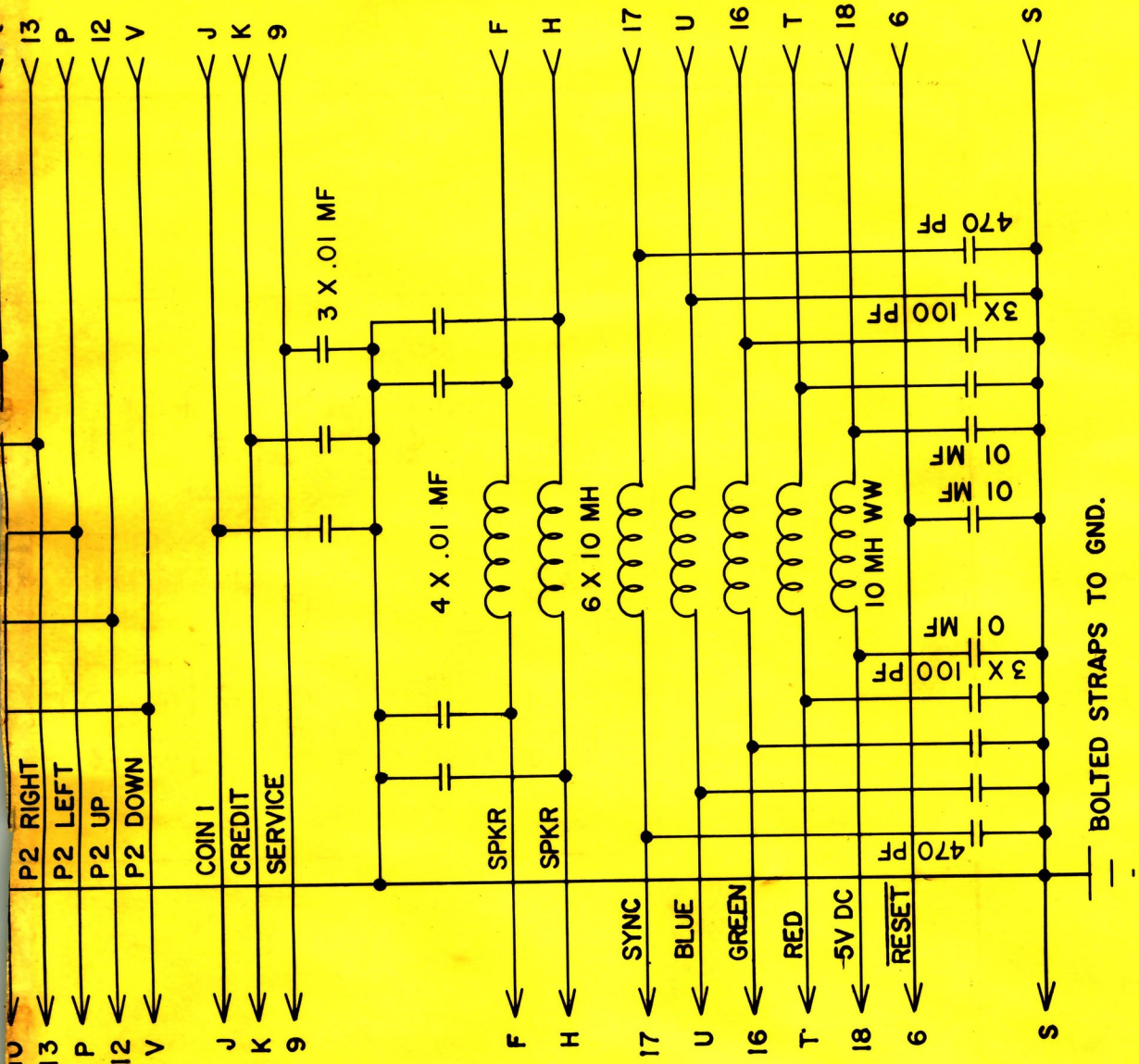

REVISIONS

HEAT TREAT	USED ON PAC-MAN	**MIDWAY MFG. CO.** FRANKLIN PK ILL
SCALE	NO REQ'D 1 PER	
MATL	SCHEMATIC DIAGRAM PAC-MAN FILTER P.C.	PART NO A082-91389-D000
FINISH		

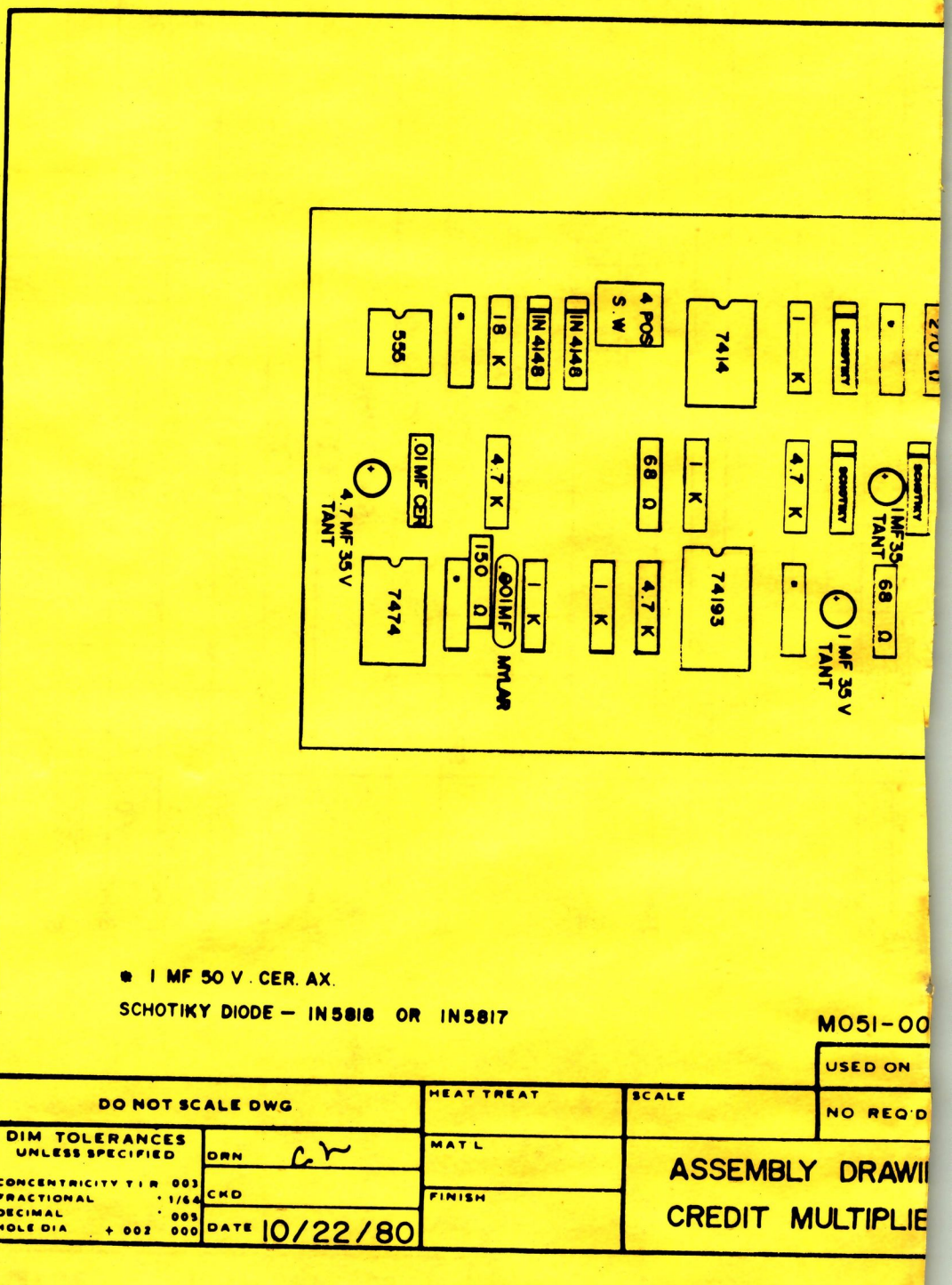

* 1 MF 50 V. CER. AX.

SCHOTIKY DIODE – IN5818 OR IN5817

M051-00

DO NOT SCALE DWG		HEAT TREAT	SCALE
DIM TOLERANCES UNLESS SPECIFIED CONCENTRICITY T I R .003 FRACTIONAL ± 1/64 DECIMAL .XXX ± .005 HOLE DIA .XXX + .002 .000	DRN C.T.	MAT'L	ASSEMBLY DRAWI
	CKD		CREDIT MULTIPLIE
	DATE 10/22/80	FINISH	

USED ON

NO REQ'D

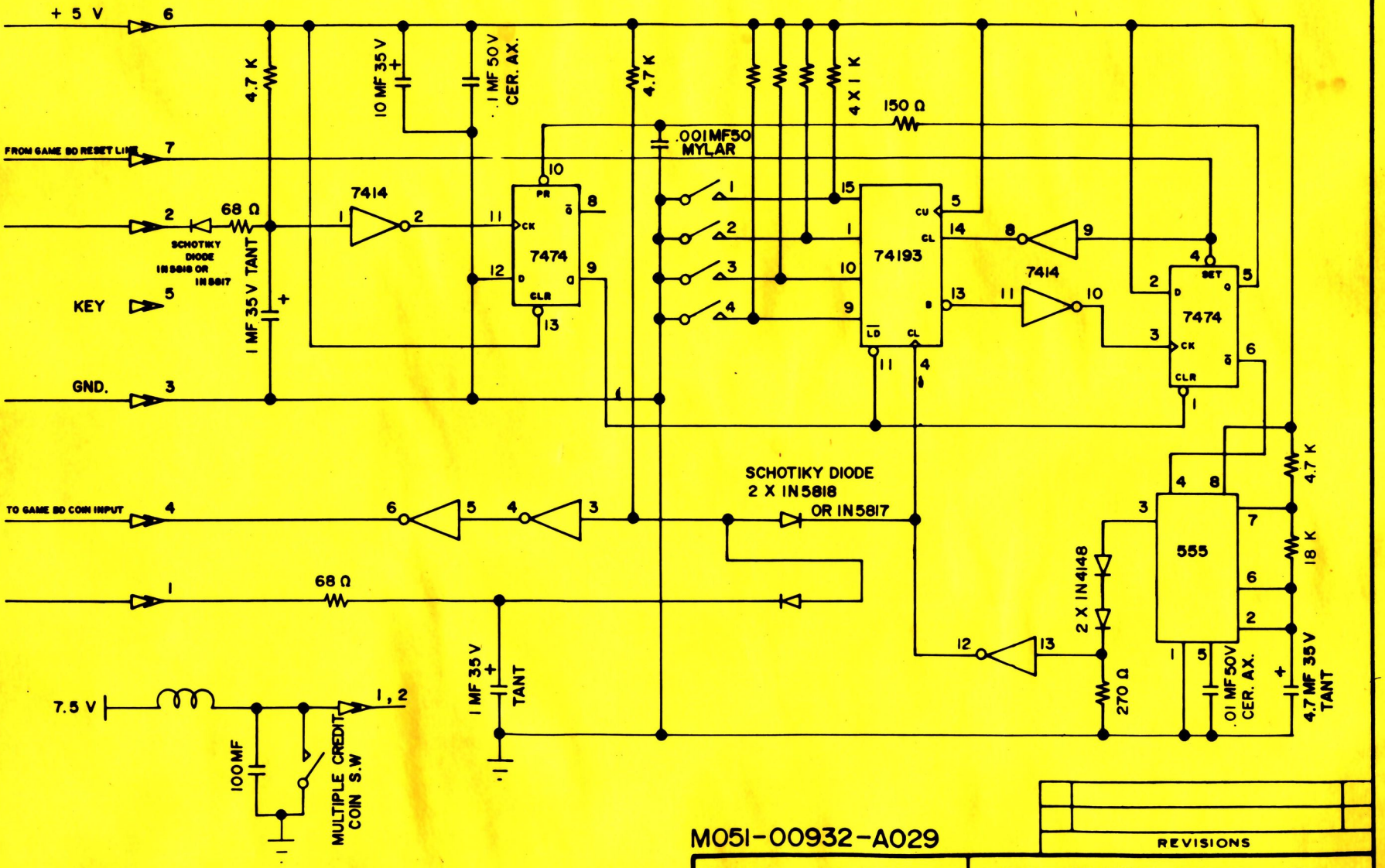

M051-00932-A029

REVISIONS

DO NOT SCALE DWG.	HEAT TREAT	SCALE	USED ON PAC-MAN	MIDWAY MFG. CO.
DIM. TOLERANCES UNLESS SPECIFIED CONCENTRICITY T I R .003 FRACTIONAL ± 1/64 DECIMAL ± .005 HOLE DIA. + .002 - .000	DRN	MAT'L	NO. REQ'D	FRANKLIN PK. ILL.
	CKD	FINISH	SCHEMATIC DIAGRAM CREDIT MULTIPLIER	PART NO. A082 - 91348 - C000
	DATE 10/23/80			